A Standard Screening Matrix for Composite Materials

Presented at the E Beam Conference at Oak Ridge National Laboratories, September 10,1997

By John Moylan,

Delsen Testing Laboratories, Inc
1024 Grand Central Ave
Glendale CA 91201
818 247 4106

Composite Materials Characterization Inc.

A Consortium of Firms founded to pool resources for characterizing new composite materials and processes.

Members Include

Lockheed Martin (including Grumman and LTV)

Sikorsky (United Technologies)

General Electric Aircraft Engines

Rohr

Dow Chemical

The Consortium is currently seeking new members.

Benefits include:

Pooling of resources to characterize more materials

Technical interchange on the material properties and processing of new materials

A role in selecting materials to characterize

CMC has developed:

A Screening Matrix

Test Methods

The matrix and methods were selected and developed by the technical committee of CMC to meet the needs of the various members.

Methods were selected that would efficiently screen materials for their utility in aerospace applications.

The methods and screening process are mature, in place for 7+ years, over 40 materials investigated.

Task	CMC Method Reference	No. of Specimens per Material	Test Condition	Panel ID
Prepreg Acceptance				
Prepreg visual	P1-1	1	RTA	Prepreg
Prepreg Gel Time	P1-3	3	350°F	Prepreg
Prepreg Tack	P1-5	3	RTA	Prepreg
Prepreg Flow	P1-2	3	350°F	Prepreg
Prepreg Volatiles	P1-4	3	350°F	Prepreg
Prepreg Resin Content	P1-6	3	per method	Prepreg
Prepreg Fiber Areal Weight	P1-6	3	RTA	Prepreg
Drape	P1-7	3	RTA	Prepreg
Prepreg Viscosity (DMA)	P1-8	1	per method	Prepreg
Prepreg DSC		1		

Laminate Quality				
C Scan	P3-1	entire panel	per method	All
Laminate Density	P3-3	3/panel	RTA	All
Cured Ply Thickness	P3-2	per method	RTA	All
Fiber Volume/Void Content	P3-4 & P3-6	3/panel	per method	All
Photomicrograph	P3-6	1	per method	All

Physical/Mechanical Tests				
0° Tension	P6-1	5	RTA	ZDT
90/0° Compression	P6-2	5	RTA	ZDC
0° Compression Modulus	P6-3	3	RTA	ZDT
+/-45° In Plane Shear	P6-4	3	RTA	APT
		3	ETW	APT
Open Hole Tension	P6-5	5	RTA	QIT
		3	-65°F A	QIT
Open Hole Compression	P6-6	3	RTA	TPL-QI
	P6-6	9	ETW	TPL-QI
Bolt Bearing Strength	P6-7	5	RTA	QIT
Compression After Impact	P6-8	4	RTA	QIPIC
Microcracking	P5-2	2	Thermal cycling	QICRK
		3	Mechanical Cycling	
Dry Glass Transition		1		TPL-QI
Wet Glass Transition		1		TPL-QI
Dry Tg by DSC		1		TPL-QI
Wet Tg by DSC		1		TPL-QI
Dry Tg by TMA (expansion)		1		TPL-QI
Wet Tg by TMA (expansion)		1		TPL-QI

Common Issues

Specimen Preparation

Panel Quality

- Flat
- Uniform Thickness
- No evidence of dry spots .
- No evidence of delamination.
- No evidence of fiber waviness or marcelles.
- Ply's need to be aligned +/- 1 degree or better.
- Fiber nesting in fabrics needs to be addressed in panel fabrication procedures.

Any panel problems need to be fully documented

Tabbing

Tabs need to be aligned and symmetrical.

Are there unwanted bending moments introduced by the test set up/

Adhesives and tab materials must withstand environmental conditioning and test extremes

Tabs need to be strain compatible with the test specimens
- similar coefficients of thermal expansion
- tabs should be relatively similar or more compliant than the test specimen

Common Tab Materials

0/90 tape or woven glass/epoxy tabs (G11 printed circuit board material, Scotchply 9009)

Same material as the test specimen

Adhesives

Strong enough to hold the tabs

Free of voids and discontinuities

Permits control of flow so that a uniform fillet can be achieved

Relatively compliant

Machining of Coupons

Orientation needs to be +/- 1 degree or better

Specimens should be square (not tapered or trapezoidal)

Edges should be a smooth as possible

Special attention should be paid to the areas where loads are introduced (tabs, ends of end loaded specimens)

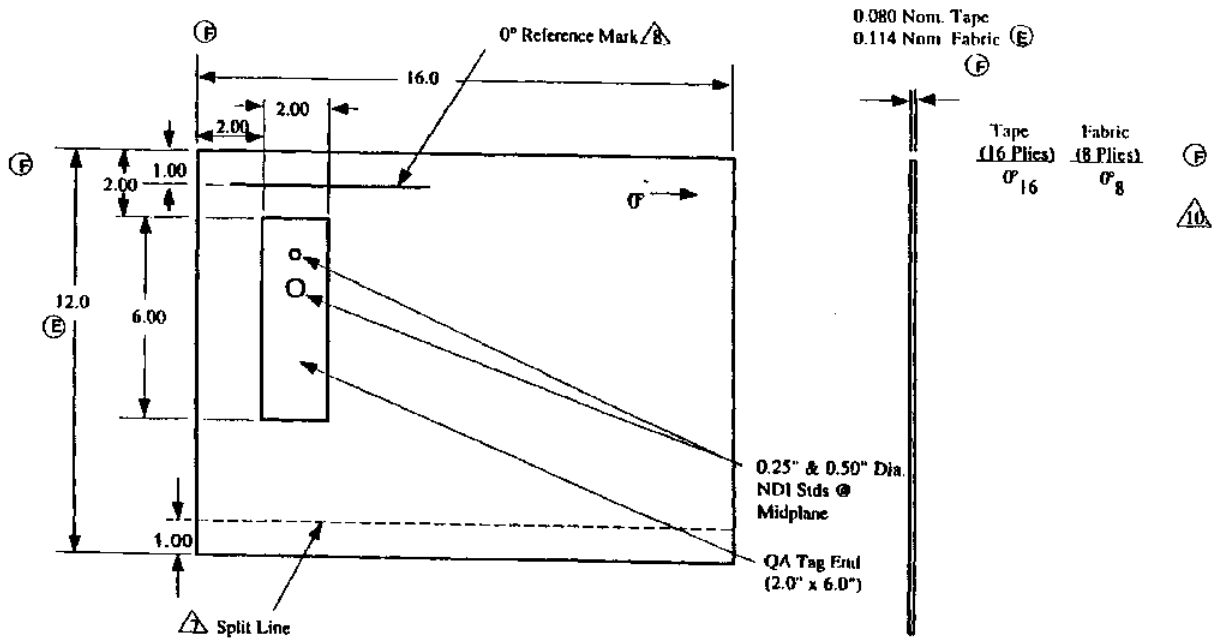

PANEL TPL

REVISIONS			
LTR	DESCRIPTION	DATE	APPROVED
A	Added Note 5, Changed Note 7	8/8/91	C. Boshers
B	Changed Notes, Added RTM Ref., Added 0° Ref.	6/20/92	C. Boshers
C	Reduced Panel Size, Removed Tabs	12/3/92	S. Reeve
D	Added Note 10	1/28/93	S. Reeve
E	Changed Fabric Nominal Thickness	5/5/93	S. Reeve
F	Added Note 11, Deleted RTM References, Revised Note 10.	4/27/94	C. Boshers

NOTES:

(E) 6. Nominal thickness is based on 0.005 in./ply tape & 0.0142 in./ply fabric

(A) 5. Layup all fabric plies warp side to fill side

4. For fabric 0° is warp direction

(B) 3. Identify all panels and coupons with white ink. Mark panel ID at least two inches away from the nearest edge

2. NDI stds are grafoil

1. All dimensions in inches

(F) 11. For RTM materials, use the panel configuration ZDC for trial processing.

(D) (F) 10. For graphite fibers only, use 8 plies if fiber areal weight > 361 g/m^2. Use 9 plies if fiber areal weight ≤ 361 g/m^2.

(B) 9. Panel dimensions are sized to allow for saw cut widths between specimens and rough cut specimen dimensions.

(A) (F) 8. Reference mark used to establish 0° reference for fabric panels per para. 3.9.1 of the Test Methods and Processing Procedure Manual.

7. Split line used to establish 0° reference for unidirectional tape laminates

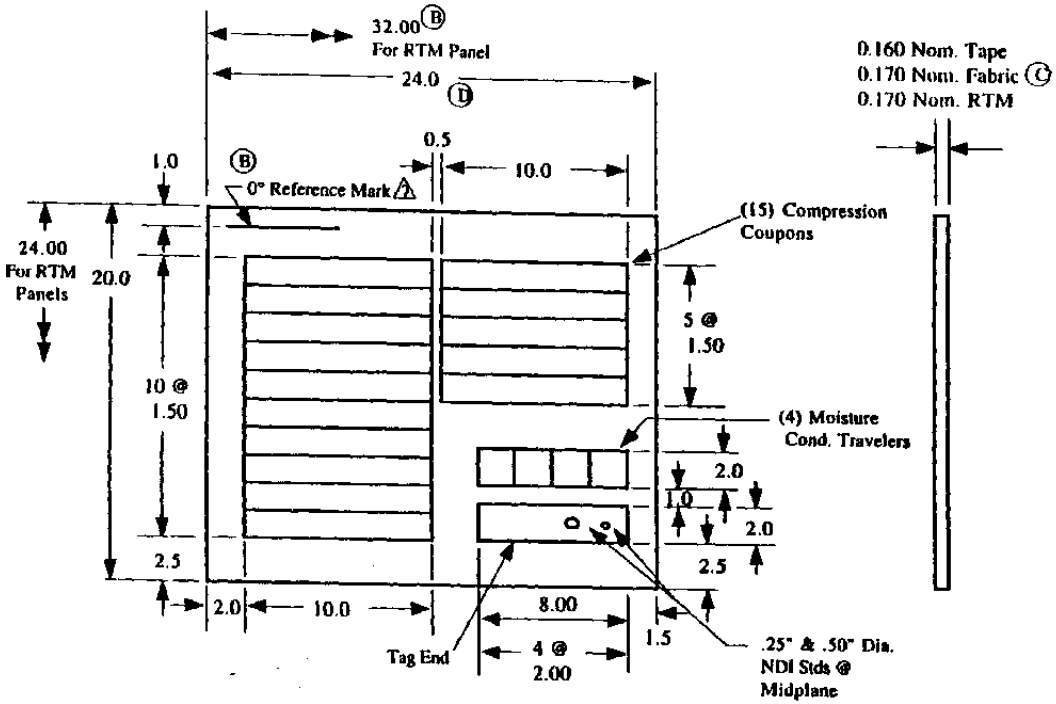

Tape (32)	Fabric and RTM (12)
45	45
0	0
135	135
90	90
45	45
0	0
135	0
90	45
45	90
0	135
135	0
90	45
45	
0	
135	
90	
90	
135	
0	
45	
90	
135	
0	
45	
90	
135	
0	
45	
90	
135	
0	
45	

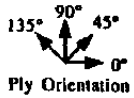

PANEL TPL-QI

REVISIONS			
LTR	DESCRIPTION	DATE	APPROVED
A	Added Note 5	8/8/91	C. Boshers
B	Changed Notes, Added RTM Ref., Added 0° Ref.	8/21/92	C. Boshers
C	Changed Fabric Nominal Thickness.	5/5/93	S. Reeve
D	Changed Number of Compression Coupons. Changed Panel Size.	10/15/93	S. Reeve

NOTES:

1. All dimensions in inches.
2. NDI standards are grafoil.
3. (B) Identify all panels and coupons with white ink. mark panel ID at least two inches away from the nearest edge.
4. For fabric 0° is warp direction.
5. (A) Layup all fabric plies warp side to fill side.
6. (C) Nominal thickness is based on 0.005 in./ply tape & 0.0142 in./ply fabric.
7. (B) Reference mark used to establish 0° reference per para. 3.9.1 of the Test Methods and Processing Procedure Manual.

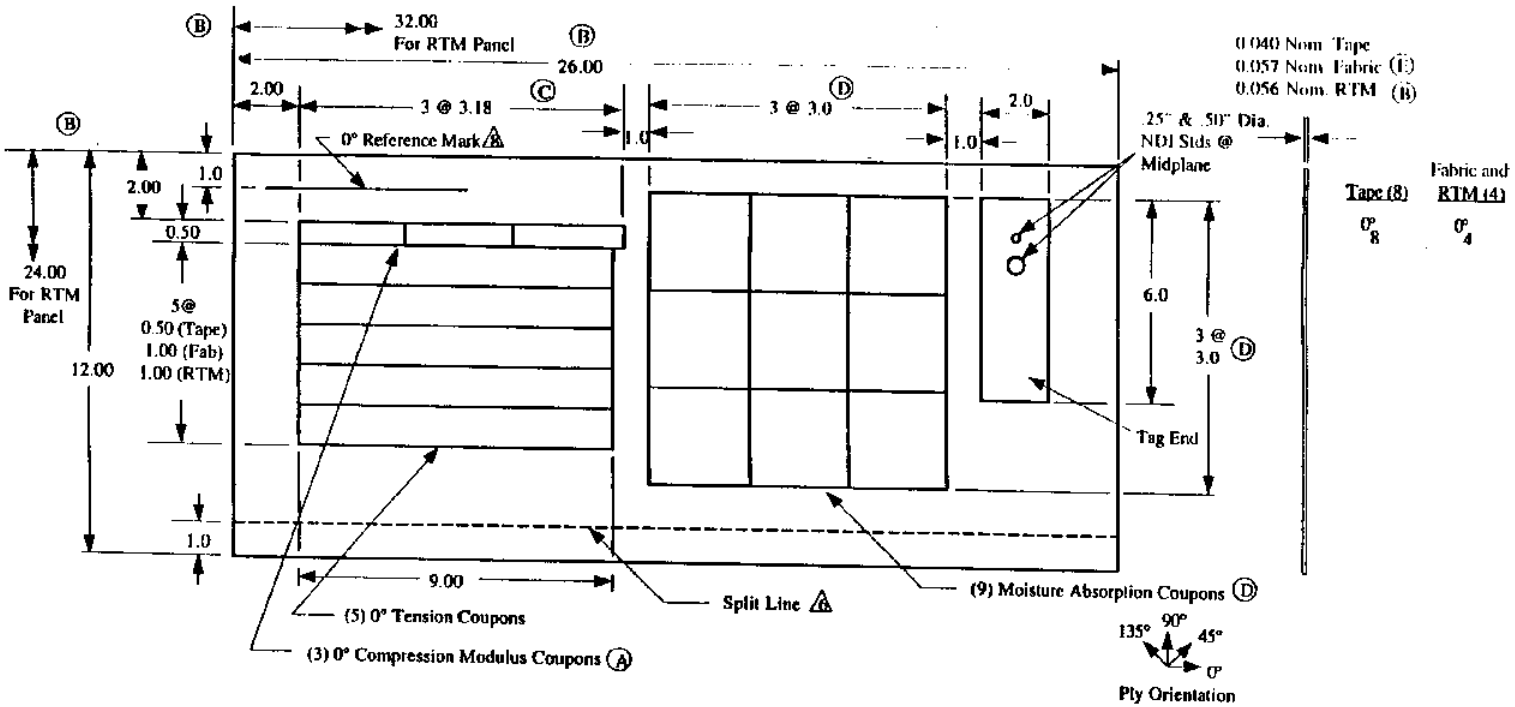

PANEL ZDT

REVISIONS			
LTR	DESCRIPTION	DATE	APPROVED
A	Added Note 5, Added Coupons	6/8/91	C. Boshers
B	Changed Notes, Changed Panel Size, Added RTM Ref., Added 0° Ref.	8/24/92	C. Boshers
C	Added TOS Coupons	12/7/92	S. Reeve
D	Changed Number, Size of Moisture coupons	4/8/93	S. Reeve
E	Changed Fabric Nominal Thickness	5/5/93	S. Reeve
F	Removed TOS Coupons	10/22/93	S. Reeve

NOTES:

1. All dimensions in inches.
2. NDI standards are grafoil.
3. (B) Identify all panels and coupons with white ink. Mark panel ID at least two inches away from the nearest edge.
4. For fabric 0° is warp direction.
5. (A) Layup all fabric plies warp side to fill side.
6. (E) Nominal Thickness is based on 0.005 in/ply tape and 0.0142 in/ply fabric.
8. Panel dimensions are sized to allow for saw cut widths between specimens and rough cut specimen dimensions.

(B) Reference mark used to establish 0° reference per para. 3.9.1 of the Test Methods and Processing Procedure Manual.

Split line used to establish 0° reference for tape laminates.

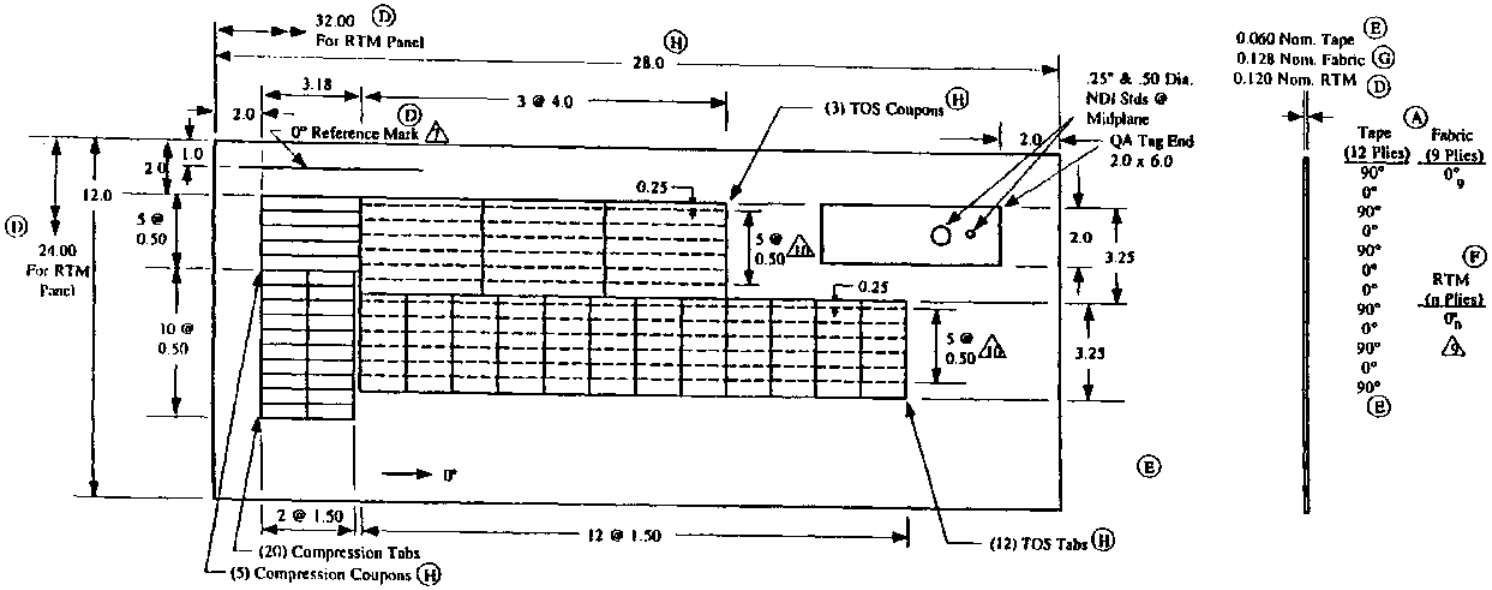

(A) 5. Layup all fabric plies warp side to fill side.

(H) 4. For fabric 0° is warp direction.

3. Identify all panels and coupons with white ink. Mark panel ID at least two inches away from the nearest edge.

2. NDI stds are grafoil.

1. All dimensions in inches.

NOTES:

10 (H) Dashed lines indicate coupon machining after TOS exposure and tab bonding.

9 (I)(F) For graphite fiber only, use 8 plies if fiber areal weight > 361 g/m². Use 9 plies if fiber areal weight ≤ 361 g/m².

8. Panel dimensions are sized to allow for (D) saw cut widths between specimens and rough cut specimen dimensions.

7 Reference mark used to establish 0° reference per para. 3.9.1 of the Test Methods and Processing Procedure Manual.

(D) (G) 6. Nominal thickness is based on 0.005 in./ply tape & 0.0142 in./ply fabric.

PANEL ZDC

REVISIONS			
LTR	DESCRIPTION	DATE	APPROVED
A	Added Note 5, Changed Layup.	8/6/91	C. Boehere
B	Removed Note 7.	8/14/91	C. Boehere
C	Added Tab Coupons.	3/27/92	C. Boehere
D	Changed Notes, Added RTM Ref., Added 0° Ref.	8/24/92	C. Boehere
E	Enlarged Panel, Changed Tape Layup, Removed Modulus Coupons, Added Tabs.	12/3/92	S. Reeve
F	Added Note 9.	1/28/93	S. Reeve
G	Changed Fabric Nominal Thickness.	5/5/93	S. Reeve
H	Changed Panel Size. Changed TOS Coupons and Tabs.	10/22/93	S. Reeve
I	Revised Note 9.	4/27/94	C. Boehere

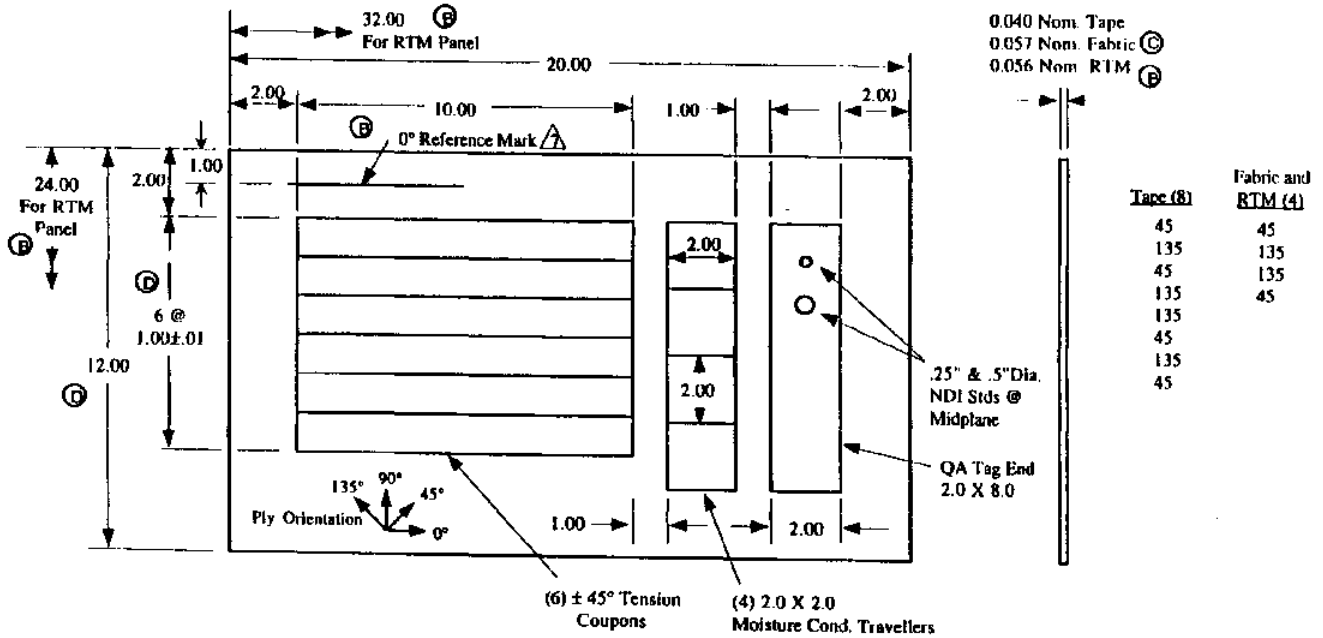

Tape (8)	Fabric and RTM (4)
45	45
135	135
45	135
135	45
135	
45	
135	
45	

PANEL APT

REVISIONS			
LTR	DESCRIPTION	DATE	APPROVED
A	Added Note 5	8/8/91	C. Bosheis
B	Changed Notes, Changed Panel Size Added RTM Ref., Added 0° Ref.	8/20/92	C. Bosheis
C	Changed Fabric Nominal Thickness.	5/5/93	S. Reeve
D	Changed Number of Coupons. Changed Panel Size.	10/15/93	S. Reeve

NOTES:

Ⓐ 5. Layup all fabric plies warp side to fill side

4. For fabric 0° is warp direction

Ⓑ 3. Identify all panels and coupons with white ink. Mark panel ID at least two inches away from the nearest edge.

2. NDI standards are grafoil

1. All dimensions in inches

Ⓑ 8. Panel dimensions are sized to allow for saw cut widths between specimens and rough cut specimen dimensions.

△1 Reference mark used to establish 0° reference

Ⓑ per para. 3.9.1 of the Test Methods and Processing Procedure Manual.

Ⓒ 6. Nominal thickness is based on 0.005 in./ply tape & 0.0142 in./ply fabric.

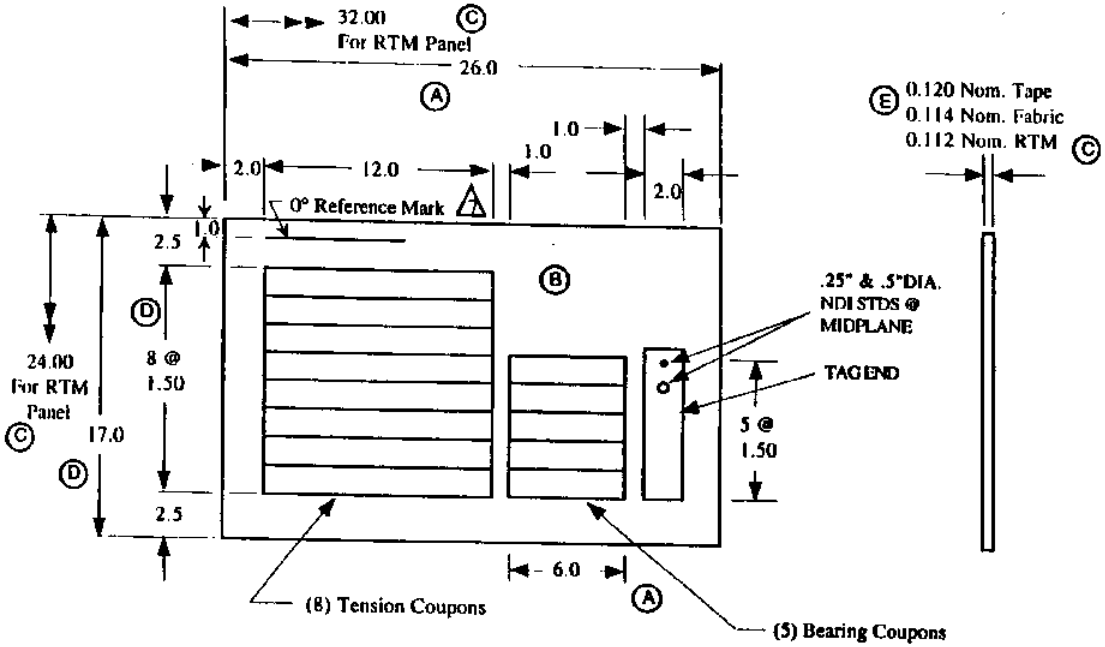

Tape (24)	Fabric and RTM (8)
45	45
0	0
135	135
90	90
45	90
0	135
135	0
90	45
45	
0	
135	
90	
90	
135	
0	
45	
90	
135	
0	
45	
90	
135	
0	
45	

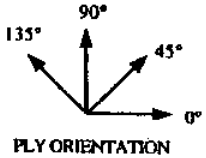

△ Reference mark used to establish 0° reference per para. 3.9.1 of the Test Methods and Processing Procedure Manual.

(C) 6. Nominal thickness is based on 0.005 in./ply tape & 0.0142 in./ply fabric.

(A) 5. Layup all fabric plies warp side to fill side.

4. For fabric 0° is warp direction.

3. Identify all panels and coupons with white ink.

2. NDI standards are grafoil.

1. All dimensions in inches.

NOTES:

PANEL QIT

REVISIONS			
LTR	DESCRIPTION	DATE	APPROVED
A	Added Note 5, Changed Layup, Changed Coupon Length	8/8/91	C. Boshers
B	Removed Tabs for Bearing Specimens	10/14/91	C. Boshers
C	Changed Fabric Nominal Thickness. Added RTM Ref.	5/5/93	S. Reeve
D	Changed Number of Tension Coupons. Changed Panel Size.	10/15/93	S. Reeve
E	Changed Number of Tape Plies. Changed RTM Thickness	8/1/94	C. Boshers

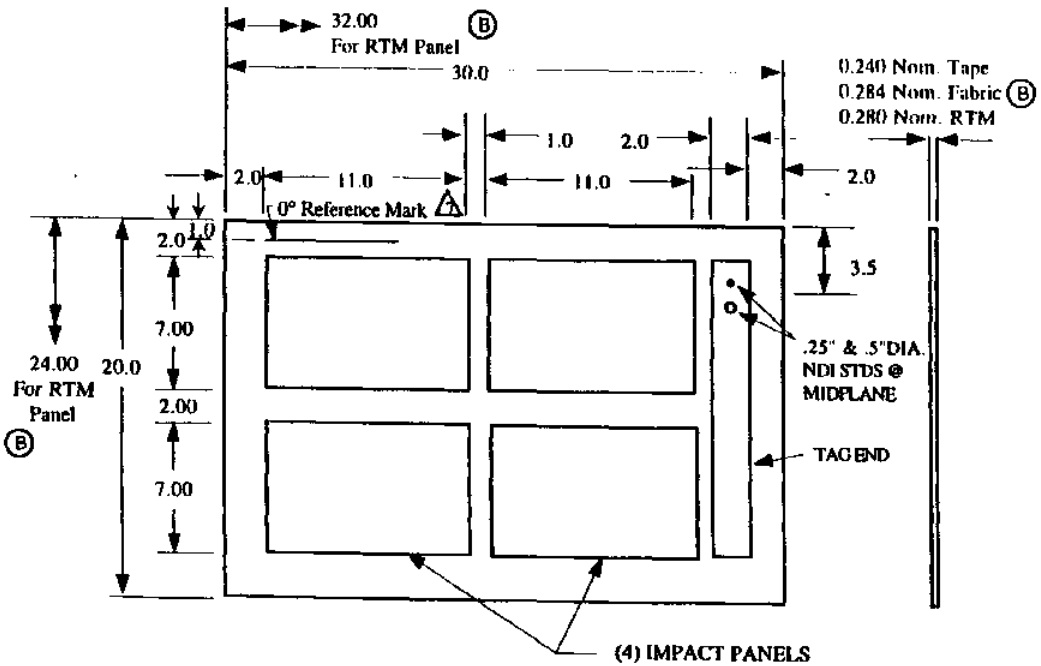

Tape (48)		Fabric and RTM (20)
45		45
0		0
135		135
90		90
45		45
0	90	0
135	135	135
90	0	90
45	45	45
0	90	0
135	135	0
90	0	45
45	45	90
0	90	135

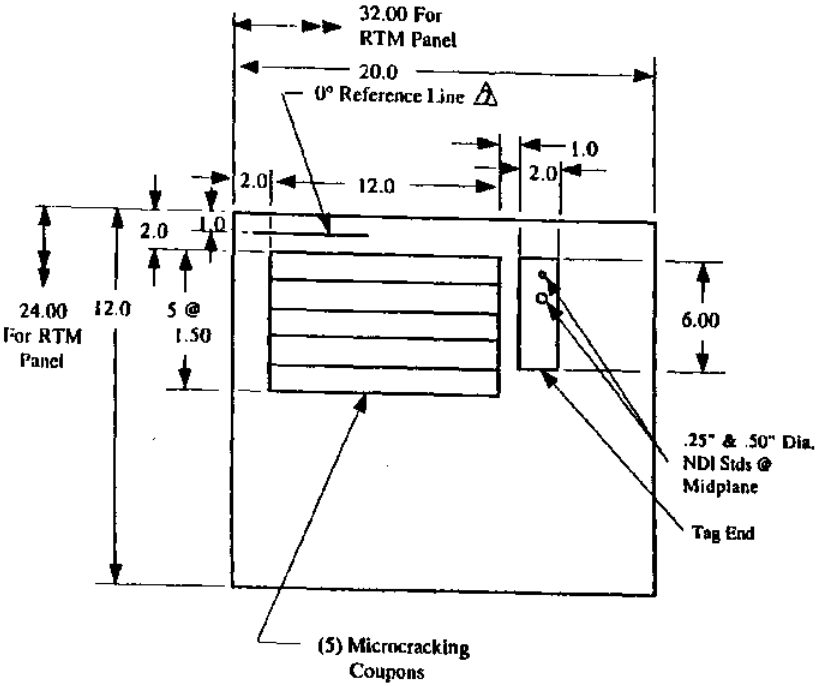

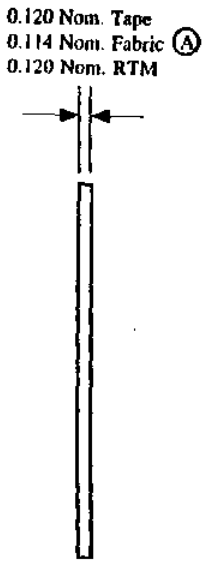

Tape (24)	Fabric and RTM (8)
45	45
135	0
90	135
90	90
90	90
45	135
135	0
0	45
0	
0	
45	
135	
135	
45	
0	
0	
0	
135	
45	
90	
90	
90	
135	
45	

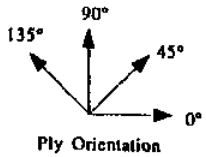

5. Layup all fabric plies warp side to fill side.

4. For fabric 0° is warp direction.

3. Identify all panels and coupons with white ink. Mark panel ID at least two inches away from the nearest edge.

2. NDI standards are Grafoil.

1. All dimensions in inches

NOTES:

8. Panel dimensions are sized to allow for saw cut widths between specimens and rough cut specimen dimensions.

△ Reference mark used to establish 0° reference per para. 3.9.1 of the Test Methods and Processing Procedure Manual.

(A) 6. Nominal thickness is based on 0.005 in./ply tape & 0.0142 in./ply fabric.

PANEL QICRK

REVISIONS			
LTR	DESCRIPTION	DATE	APPROVED
---	Initial Drawing	2/15/93	S. Reeve
A	Changed Fabric Nominal Thickness	5/5/93	S. Reeve

Figure P6—1(1) O° Tension Specimen

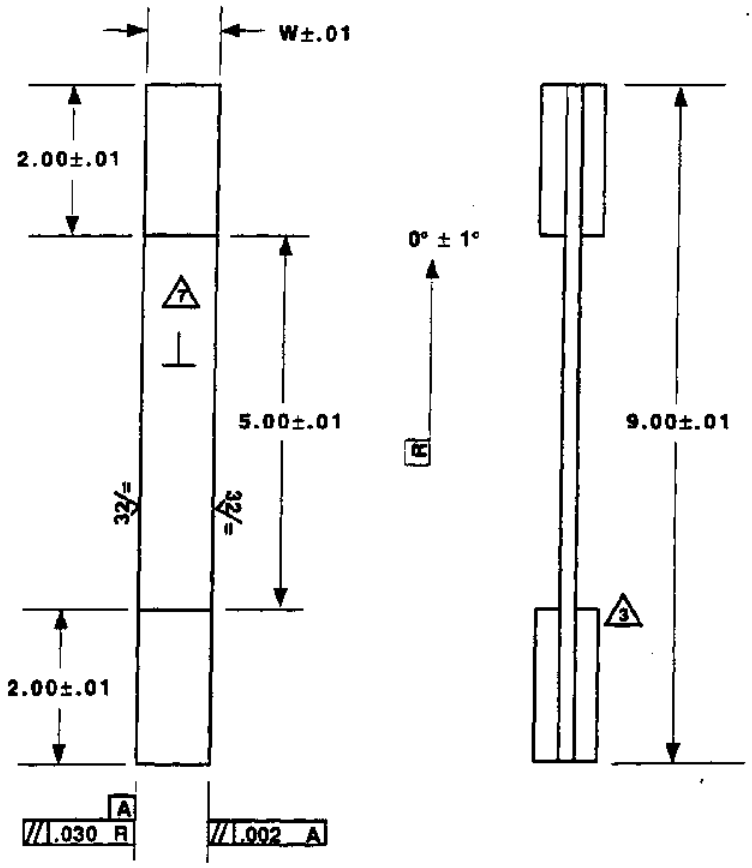

7 T strain gage (one side).

6. W = 0.50 for tape and 1.00 for fabric.

5. φ is 0° (parallel to fiber or warp direction) for 0° tensile test specimen. The reference datum, R.

4. Prepare the specimen prior to bonding the tabs by grit blasting with 60 grit silica sand and cleaning with Freon TF. Bond tabs to test panel using FM 400 or FM 35 adhesive.

3 0.062 G10 fiberglass tabs with square ends.

2. (Deleted)

1. All dimensions are in inches.

NOTES:

P6—2(1) Compression Strength Test Specimen

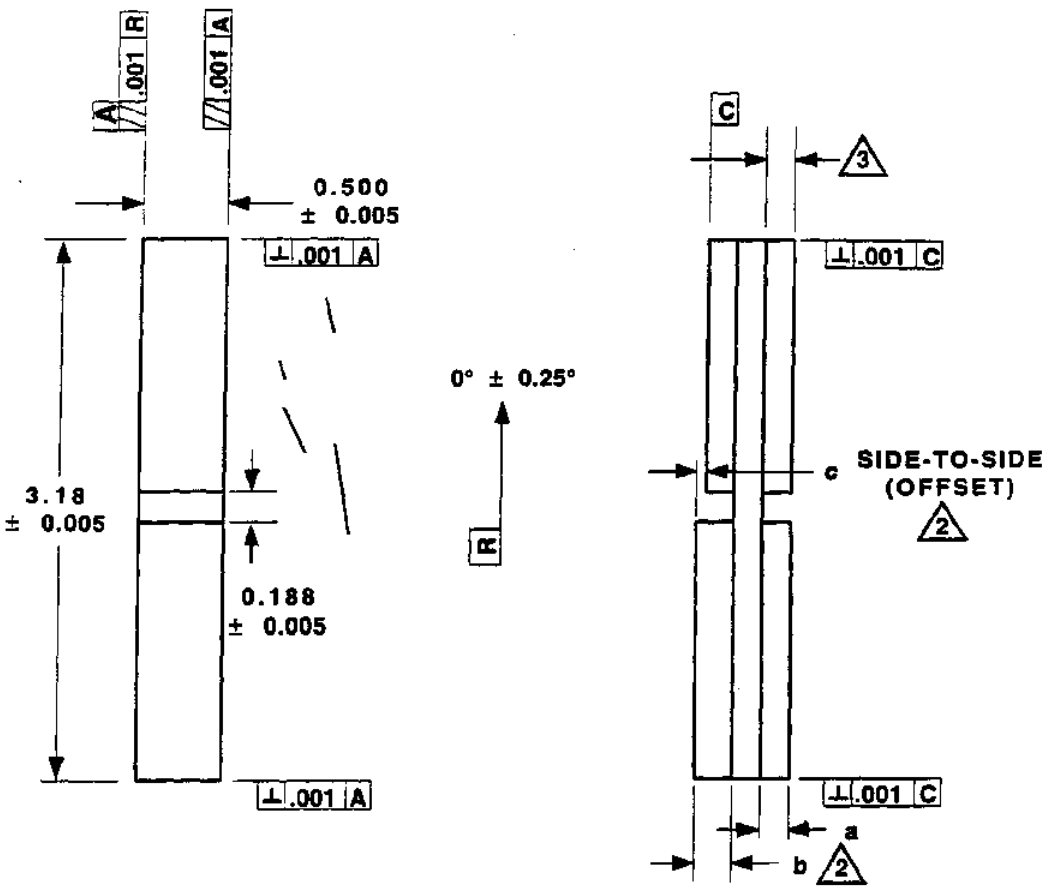

NOTES:

1. All dimensions in inches.

2. "a" must equal "b" to within 0.002 in. (.05 mm) and "c" must be less than 0.0025 in. (.06 mm).

3. Specimen thickness shall be 0.060 in. (1.5 mm) nominal for unidirectional tape with 90/0 tape lay-up, and 0.128 in. (3.25 mm) nominal for fabric/RTM specimen unless otherwise specified.

4. Tabbing material from same panel as coupons.

Figure P6—3(1) Compression Modulus Test Specimen

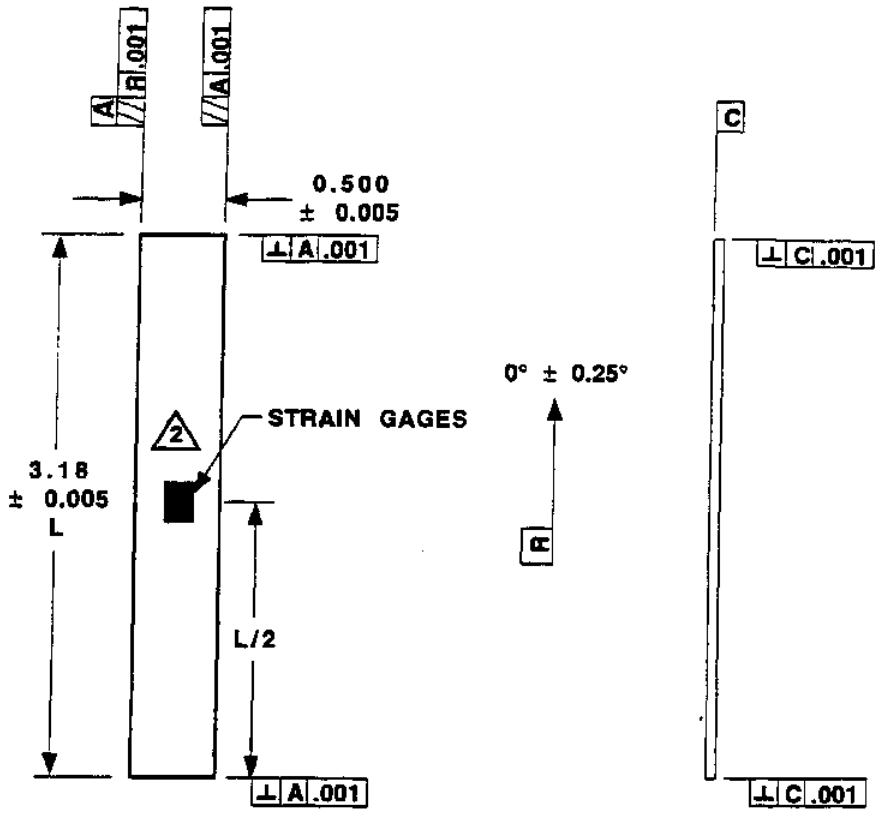

NOTES:

1. All dimensions in inches.
2. Back-to-back axial strain gages.

Figure P6—5(1) Open-Hole Tension Specimen

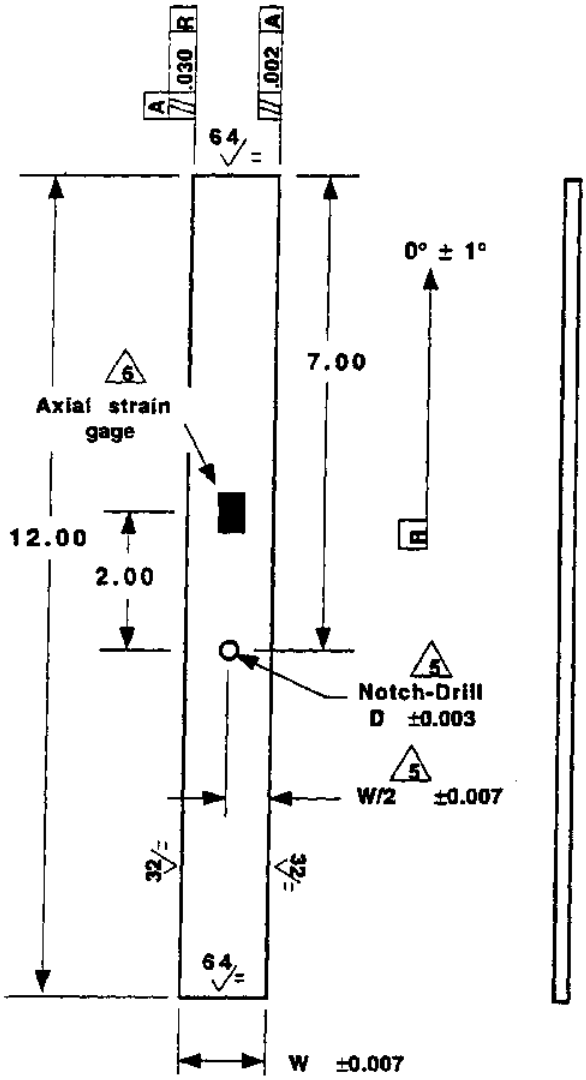

6 Strain gage if specified.

5

W	D
1.50	.250

4. Tabs not required if hydraulic grip used.

3. Unless otherwise indicated, dimensional tolerance is ± .010 in.

2. (Deleted)

1. All dimensions are in inches.

NOTES:

Figure P6—6(1) Open-Hole Compression Specimen

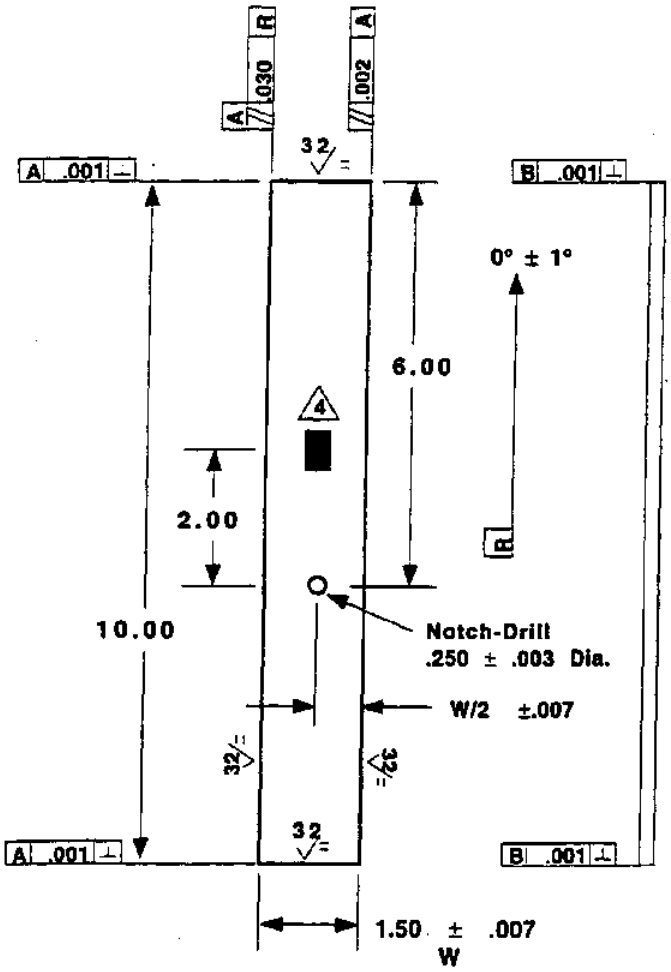

4 Back to back strain gages if specified.

3. Unless otherwise indicated, dimensional tolerance is ± .010 in.

2. (Deleted)

1. All dimensions are in inches.

NOTES:

Figure P6—6(2) Stabilizer Plates for Open-Hole Compression Test

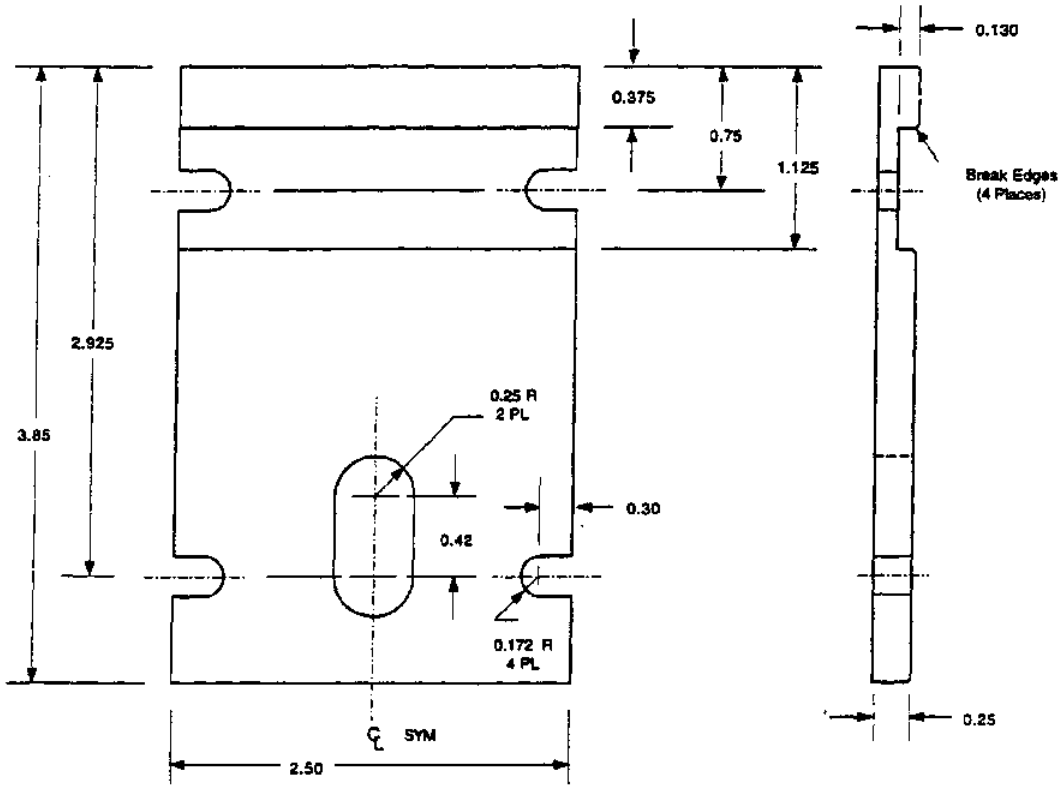

Stabilizer Plate (2 Required)

Notes: 1. All dimensions in inches.

2. Material: D-2 Steel (harden and draw to Rc 56-58) or 17-4 Ph Stainless Steel

3. Two stabilizer plates required.
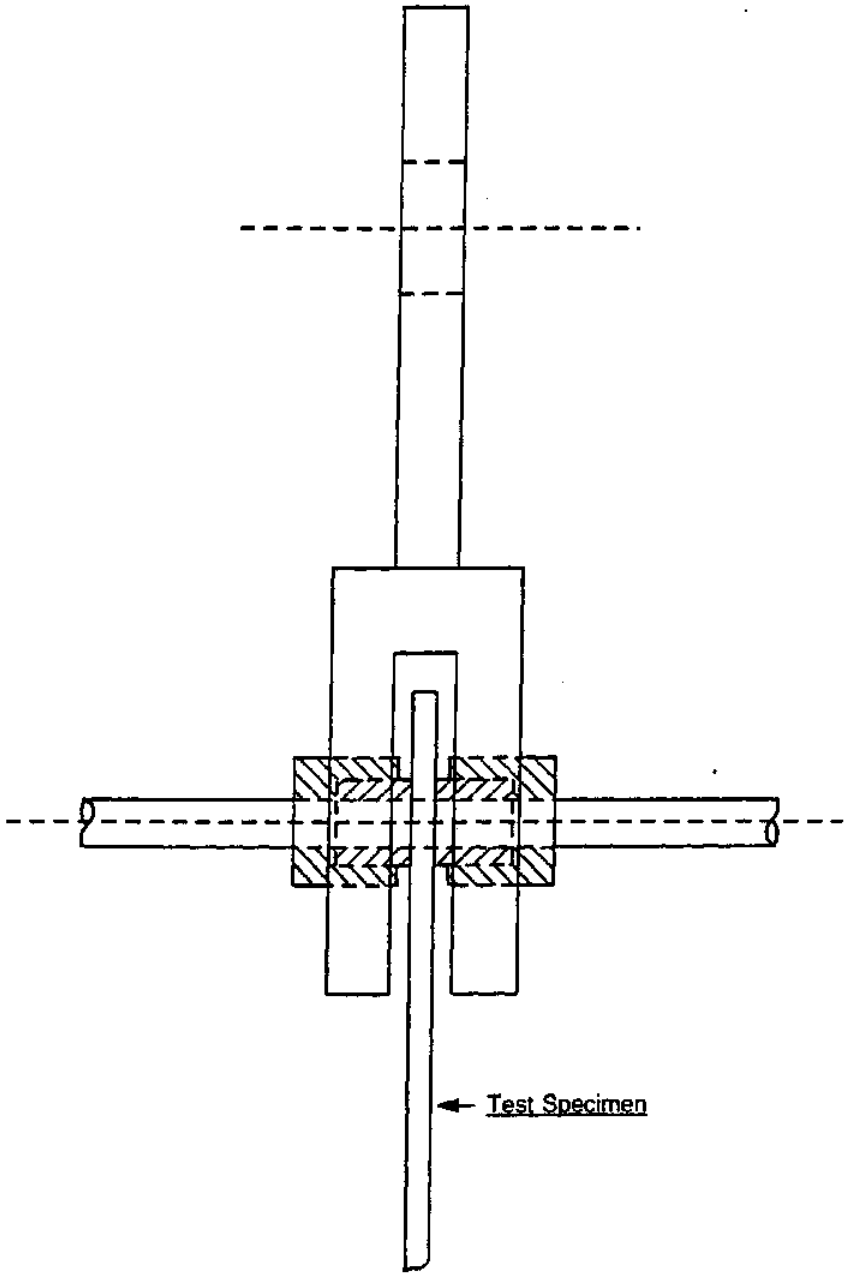
Figure P6—7(2) Bearing Test Fixture