CHAPTER THREE

CHEMICAL INDUSTRY

by Douglas W. Freitag

The chemical industry is the most diverse of U.S. industries, represented by about 10,000 corporations producing more than 70,000 different products. Classified according to eight standard industrial classification codes under Chemical and Allied Products, these products fall into three categories: (1) basic chemicals such as acids, alkalis, salts, and organic chemicals; (2) chemical products needed in manufacturing processes such as synthetic fibers, plastic materials, dry colors, and pigments; and (3) finished chemical products that will be consumed (e.g., drugs, cosmetics, and soaps) or supplied to other industries (e.g., paints, fertilizers, and explosives). Examples of major chemicals produced include ethylene, propylene, chlorine, sulfuric acid, ammonia, and polyethylene. The chemical industry is its own best customer, reflecting the use of chemical intermediates for the manufacture of more complex chemical products.

Petrochemicals are included as part of basic chemicals and are products of crude oil limited to only one or two specific hydrocarbons of fairly high purity. While petrochemicals make up little more than 6% of all petroleum feedstocks, the variety of products is large. Refined products prepared as a fraction from crude oil include gasoline, diesel fuel, heating oils, and lubricants.

As the world's largest producer of chemicals, the U.S. chemical industry shipped $372 billion worth of products worldwide in 1996, creating one of the largest trade surpluses of any industrial sector ($21.2 billion in 1996), representing 10% of all U.S. manufacturing, and employing more than one million Americans. The industry's annual energy consumption is 5.8 quads. According to Industrial Information Resources, Inc., the chemical and petrochemical industry will spend $56 billion in 1998 for capital and maintenance, repair, and overhaul of plant equipment. Five major forces are among those shaping the future of the chemical industry:

- increasing globalization of markets,
- societal demands for higher environmental performance,
- financial market demands for increased profitability and capital productivity,
- higher customer expectations, and
- changing work force requirements.

In response to these business forces, the chemical industry, in cooperation with the U.S. Department of Energy (DOE) Office of Industrial Technologies, has prepared its vision statement: *Technology Vision 2020: The U.S. Chemical Industry*. To support the vision goals, technical recommendations have been developed in four areas:

- new chemical science and engineering technology,
- supply chain management,
- information systems, and
- manufacturing operations.

Advanced ceramics are expected to play an important role in meeting the identified challenges for each of these recommendations.

The following sections describe current chemical industry processes and how ceramic-based materials might contribute to achieving the chemical vision. The discussion will also include elements of the petroleum refining industry where overlap and similarities exist with the chemical industry.

3.1 PROCESS OVERVIEW

An aerial view of a chemical processing plant is shown in Fig. 3.1. The typical chemical processing plant occupies ten to hundreds of acres and employs several hundred workers. The plant includes a complex series of capital-intensive processes to manufacture value-added products. Chemical processing plants are frequently located adjacent to customers or suppliers to reduce the cost and complexities of transporting large volumes of products or feedstocks. The typical chemical processing plant represents hundreds of millions of dollars invested over short periods to

Fig. 3.1. Aerial view of a chemical processing plant. *Source*: Brochure 95-1 4M, Stone & Webster Engineering Corporation, Houston, Tex.

meet market demand. Annual production varies widely from specialty chemical suppliers producing hundreds of pounds per year to basic chemical suppliers producing millions of pounds per year. Many chemical processing plants use waste streams as supplemental energy sources.

The complexity of chemical processing is evident from Figs. 3.2 and 3.3. Chemical processes involve a series of devices for separation and filtration, mixing and sizing, energy management, solids and fluids handling, reaction, and storage. The size of the devices can range from small hand-held fluid control valves to reaction vessels several stories tall. By far the most important materials are the highly alloyed stainless steels and nickel-based alloys. Other materials commonly used include aluminum, copper and its alloys, refractory metals, and organic and inorganic materials. Materials commonly used at elevated temperatures and their applications are summarized in Fig. 3.4. Coatings are widely used because of their lower cost and ease of application, both at the time of component installation and during in-field service. Three basic requirements are considered when selecting materials for use in the chemical industry:

- processability into the often large and complex structures located at remote sites,
- ability to operate in often harsh production environments, and
- material cost both during initial installation and throughout the life of the system.

Components of chemical plants are generally subject to thermal, mechanical, and chemical stresses. The combination of these stresses places very heavy demands on plant materials, especially with regard to corrosion. While technical rules exist for designing and dimensioning components for meeting combined mechanical and thermal loads, the addition of wear and corrosion require special design criteria which are often application unique. Owing to the complexity of the stress states and harshness of the widely varying environments, prediction of lifetime is particularly difficult, and no accepted methods of prediction exist. The generally accepted practice is to simulate typical stress-forming processes in test specimens similar to plant components. Based on available experience, the design of plant and components is best performed so they can withstand the most intense stresses that would result in the shortest useful life.

The life of most chemical plant components depends not only on the mechanical and thermal loads, but also on the nature and spectrum of the corrosive medium. The general rule is that corrosive damage is not the loss of the material

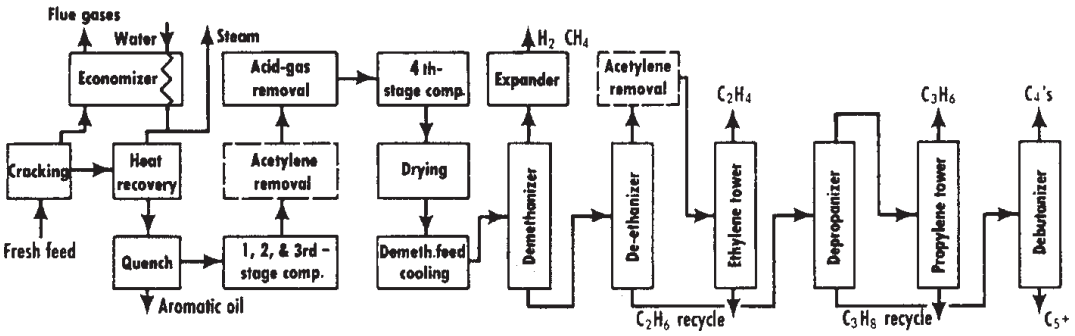

Fig. 3.2. Modern ethylene chemical process. *Source:* L. P. Hallee, S. B. Zdonik, and E. J. Green, "Manufacturing Ethylene," *Oil and Gas Journal*, Vol. 68, Petroleum Publishing Co., Tulsa, Okla., 1970.

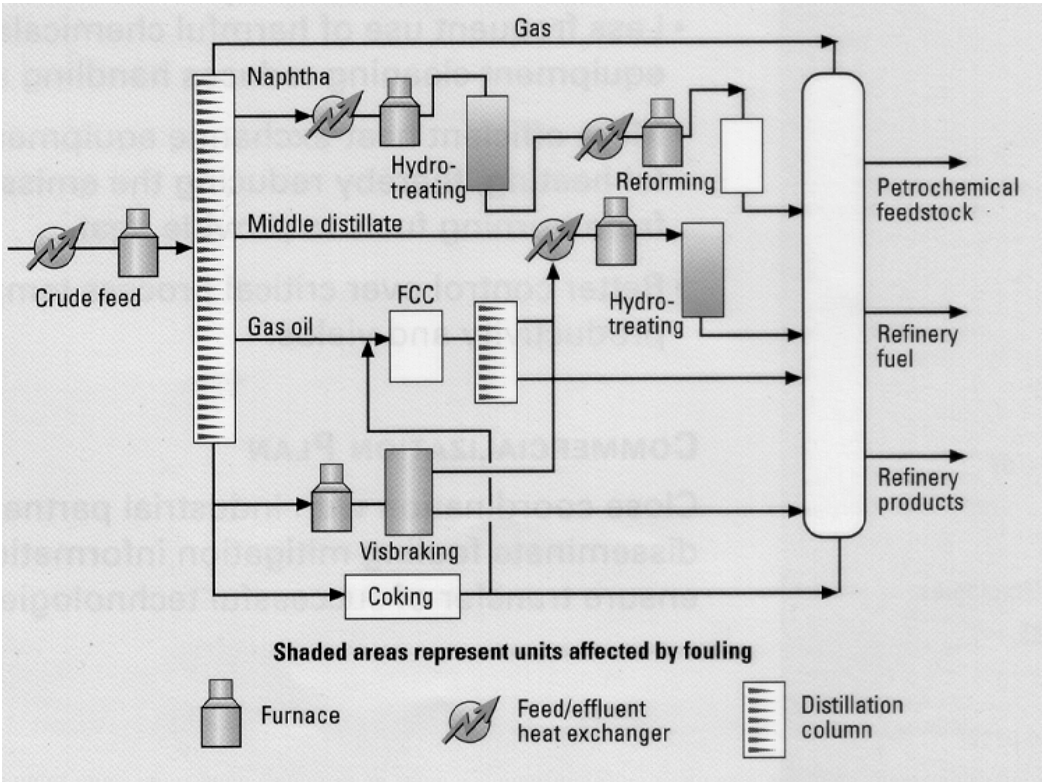

Fig. 3.3. Major processes used in petrochemical refining. *Source:* "Petroleum Refining: Fouling Mitigation for Increased Energy Efficiency and Productivity," U.S. Department of Energy fact sheet.

Material	Application
Steels	Broadly used for applications < 800ºC
Ni alloys	Broadly used for applications < 1100ºC
Refractory metals (Ti, Zr, Ta, and Nb)	Heat exchangers, reactor, columns, agitators, pipelines, fittings, bellows, pumps
Graphite	Heat exchangers, columns, sprinkling coolers, pumps, valves, pipelines, many other small parts
Ceramics (SiC, Al_2O_3, and Si_3N_4)	Reactor linings, vessel closures, slide rings, seals, sensor protection, heating elements, bearings, cutters

Fig 3.4. Typical materials for elevated-temperature use and their applications in the chemical industry. *Source:* F. Ullmann, *Ullmann's Encyclopedia of Industrial Chemistry,* 5th ed., VCH Publishers, New York, 1987.

but the impairment of the material's function. Uniform corrosion, for example, may cause a considerable loss of material before serviceability of a part begins to suffer. Many designs in the chemical industry are based on this principle and compensate for the experimentally determined thinning rate caused by corrosion. Such compensation adds considerable weight, cost, and size to reaction vessels, support structures, columns, etc. Unlike uniform corrosion, localized or selective corrosion can accelerate failure of a part by causing a notching effect that results in low-ductility fracture in a part that bears a mechanical load. The stability of the part can be improved by selecting a metal alloy that forms a thin protective film in-service. For example, aluminum is commonly added to metal alloys designed to operate at elevated temperatures. When exposed to oxygen at elevated temperatures, the aluminum-containing metal alloy forms a thin film of aluminum oxide at the surface. Unlike surface applied coatings, thin films formed in-situ by the metal alloy are self-healing and regenerate after damage from exposure to wear or mechanical impact.

Corrosion tables are frequently used to compare the behavior of material during initial consideration. While useful in considering general trends, these tables fail to consider all the conditions in effect at varying times during a given process. Not only are temperature and pressure changes occurring, but chemical processes normally involve starting products and end products, intermediates and by-products (often with unknown properties), and solids that promote wear. For this reason, few standardized corrosion tables exist, and those that do usually contain only general instructions. Samples of new materials being tested in pilot plants or in existing production plants should also be placed at several representative locations.

Because many production processes involve physical operations such as communition, conveyance, and separation of phases, the wear resistance of materials is important for numerous types of chemical devices. While models for various types of wear have been developed, the actual operating conditions are generally complex, with several kinds of wear occurring simultaneously. The overlap and interaction of wear and corrosion processes further complicates modeling and simulation. As a rule, practical trials in a production environment are ultimately required to evaluate a new material's resistance to wear in a chemical application.

To ensure that the chemical apparatus will be properly fabricated and integrated with the plant, tests are carried out before and during fabrication, before the apparatus is put into operation, and while it is in actual use. Responsibility for legislative and regulatory compliance primarily lies with the technical association having oversight, such as the American Society for Testing and Materials, and ultimately with the plant safety inspection team. Once the process is in operation, regular inspections are used to reveal incipient damage early enough to ensure that plant shutdown can be avoided and any necessary repairs can be made in a well thought out, scheduled manner.

3.2 REACTORS

The reactor is the heart of a chemical processing plant, with other devices surrounding it for physical treatment of the various material streams. Three related factors are used during reactor selection and design: the activation principle to be used with the state and number of reactants, concentration and temperature dependence of the chemical reaction, and the heat of reaction. The activation principles commonly used include catalytic, electrochemical, biochemical, decomposition of an initiator, and the addition of heat. Reactants can be in the form of gases, liquids, or solids. The heat of reaction, exothermic or endothermic, influences the need for adding or removing large quantities of heat. The concentration and temperature of the reaction must, in general, be well controlled along the length of the reaction path. Temperatures and pressures in reaction vessels are often high and their metal designs must conform to codes established by the American Society of Mechanical Engineers (ASME Sect. VIII).

Reaction vessels in use today were designed for a set of specific operating conditions. Many of these reactors are being subjected to more aggressive operating conditions resulting from changes in feedstock formulations, environmental regulations, improved processing techniques, and in many cases, the need for increased capacity without added capitalization. Reactors subjected to these changes are experiencing accelerated deterioration and are requiring increased maintenance. For many large vessels or small vessels constructed or lined with exotic metals, it is more cost-effective and timely to refurbish them than to replace them with new construction. Also, many of the reaction vessels contain numerous internal and external components that make replacement more difficult. Metal overlays or nonstructural refractory ceramics and ceramic coatings are commonly applied during refurbishment, with ceramics generally limited to applications where the increased temperature- and corrosion-resistance capability adds sufficient value to offset the higher cost.

A large variety of reactor types are in use today, but in general they fall into three categories: batch stirred-tank reactors, continuous stirred-tank reactors, and tubular reactors. More than one reactor type can be used in combination to achieve the desired overall reaction, increase efficiency, or recycle incomplete reaction products.

Batch stirred-tank reactors are commonly used for liquid phase or liquid-solid reactions where production is small, quick product change is required, or better process control is desired. Key disadvantages include high operating cost and fluctuations in quality from batch to batch. A schematic of a batch stirred-tank reactor is shown in Fig. 3.5. Most of these reactors are cylindrical about a vertical axis and have a centrally positioned vertical shaft for stirring. Wall baffles used to prevent gross gyrations of the contents during stirring are removed when processing materials (such as polymers) are prone to fouling. Thermal management is provided by a heat jacket placed around the vessel. Frequently, where the reaction is highly exothermic, additional water-cooled tubes are inserted into the reaction vessel. Stirrers are used to enhance the reaction processes locally or in the bulk. The wide variety of stirrers available are a frequent source of failure and product contamination resulting from wear and corrosion. Batch stir tanks are required to withstand a range of highly corrosive conditions and are commonly made of glass or refractory-lined metals. Limitations of glass reactor vessels include thermal shock, brittle behavior, and repair. Repair methods include tantalum patches, blind fasteners, or adhesively bonded teflon gaskets.

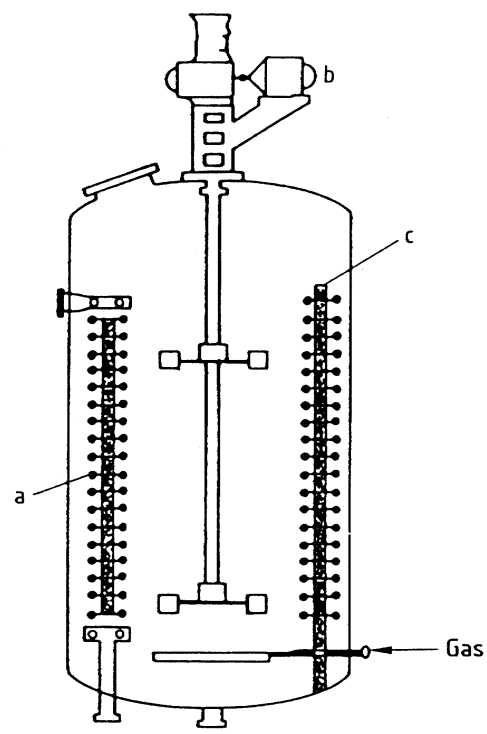

Fig. 3.5. Batch stirred-tank reactor showing (a) heating or cooling coil, (b) motor drive, and (c)baf fle. *Source:* F. Ullmann, *Ullmann's Encyclopedia of Industrial Chemistry*, 5th ed., VCH Publishers, New York, 1985.

Refractory-lined vessels generally fail at the grout line. Batch stirred-tank reactors as large as 5,000 m^3 have been installed for use at low pressures. Higher pressure reactors are limited to smaller sizes. Applications of batch stirred-tank reactors include polymerization, esterfication, dehydration, oxidation, and nitration reactions.

Continuous stirred-tank reactors are commonly used for liquid phase or gas-liquid and gas-liquid over catalyst reactions. When compared to batch stirred-tank reactors, continuous stirred-tank reactors provide higher throughput, lower cost, and more consistent quality, although the initial investment cost is higher and product change-over is more complex. A schematic of a continuous stirred-tank reactor is shown in Fig.3.6. The basic design of the continuous stirr ed-tank reactor is similar to that of the batch stirred-tank reactor, with the addition of feeds to continuously add reactants and remove products. Applications of continuous stirred-tank reactors include polymerization, oxidation, alkylation, and chlorination reactions.

An important application of batch or continuous stirred-tank reactors is polymerization reactions. Because the viscosity increases rapidly during the course of the reaction, special stirrers are used to overcome limitations of heat and mass transport. The reactions are also exothermic and require the removal of large amounts of heat through water cooling of the reaction vessel. A typical polymerization reactor is 4 m in diameter and 18 m in length and has a steel wall thickness of 2.5 cm. During maintenance, the stainless steel liners are frequently found to be pitted and require refurbishment.

Tubular reactors are commonly used for liquid-phase, homogeneous gas-phase, gas- and liquid-phase over solid catalyst, and gas-liquid reactions. While they require less maintenance (resulting from the lack of moving parts) and provide better temperature control, tubular reactors can suffer from large pressure drops and require a high investment cost because of their specialized nature. An example of a simple tubular reactor is shown in Fig. 3.7. Reaction tubes can approach lengths of 1000 m where necessary to achieve the desired residence time.

Catalytic fixed-bed reactors are one of the most important reactor types for the synthesis of large-scale basic chemicals and intermediates. In these reactors, the reaction takes place on the surface of the catalyst arranged as a fixed bed in the reactor (Fig. 3.8). In addition to large-scale chemical processing, catalytic fixed-bed reactors are

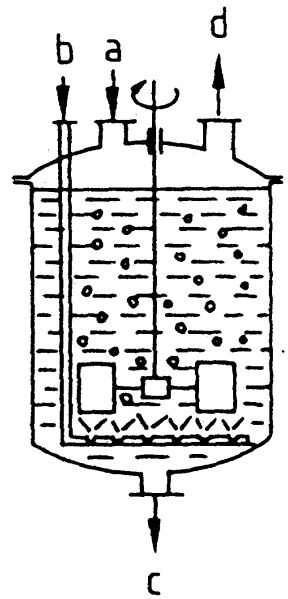

Fig. 3.6. Continuous stirred-tank reactor showing (a) liquid feed, (b) gaseous feed, (c)liquid product, and (d) of f-gas. *Source:* F.Ullmann, *Ullmann's Encyclopedia of Industrial Chemistry,* 5th ed., VCH Publishers, New York, 1985.

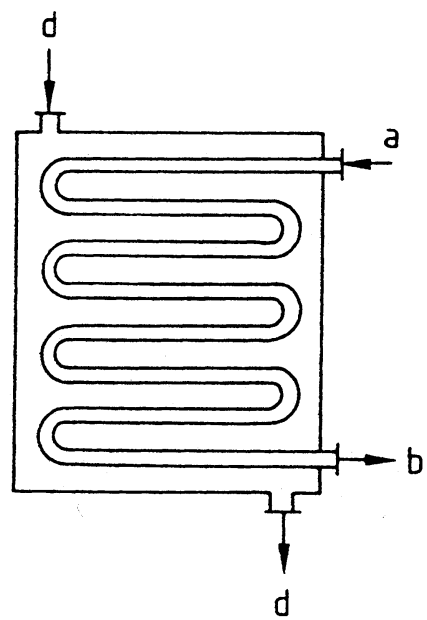

Fig. 3.7. Tubular reactor showing (a) reactant feed, (b) product, and (c) heating or cooling agent. *Source:* F.Ullmann, *Ullmann's Encyclopedia of Industrial Chemistry,* 5th ed., VCH Publishers, New York, 1985.

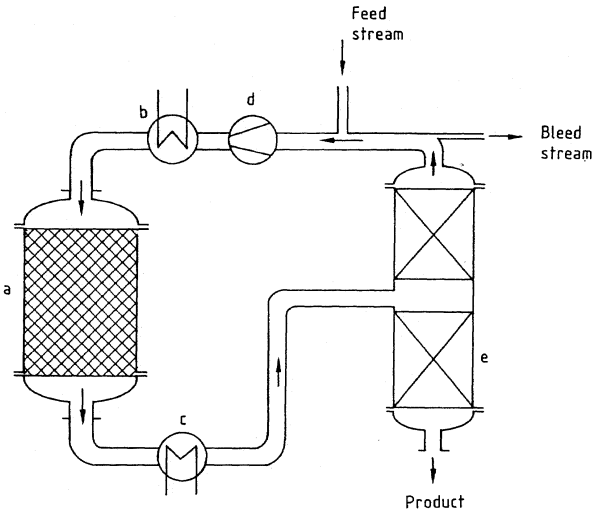

Fig. 3.8. Fixed-bed reactor with incomplete conversion showing (a) reactor, (b) feed preheater, (c) exit cooler, (d) recirculation compressor, and (e)separation chamber . ***S****ource:* F. Ullmann, *Ullmann's Encyclopedia of Industrial Chemistry,* 5th ed., VCH Publishers, New York, 1985.

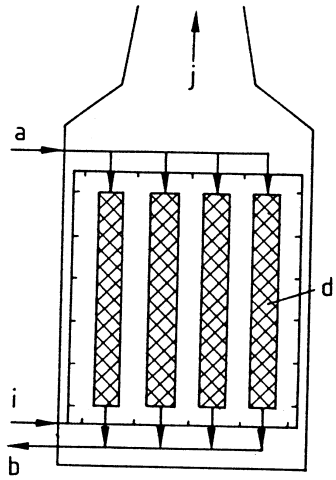

Fig. 3.9. Multitubular primary reformer showing (a) gas reaction mixture, (b) gas product, (d) catalyst, and (i)fuel gas for burners. *Source:* F.Ullmann, *Ullmann's Encyclopedia of Industrial Chemistry,* 5th ed., VCH Publishers, New York, 1985.

increasingly being used to treat harmful and toxic substances. Fixed-bed reactors are generally operated under constant conditions over long production runs. Preheat is required before the reaction, and cooling is necessary afterwards. Because of thermodynamic limitations, discharge materials are often not fully converted and must be separated into product and recycle streams. Catalyst supports are primarily ceramic materials chosen for their high-temperature capability and their inertness to the reaction. Suitable catalyst forms and arrangements include random packings of spheres, solid cylinders, and hollow cylinders, as well as uniformly structured catalyst packings in the form of monoliths with parallel channels, packed plates, and crossed corrugated plates. In some cases, proprietary catalyst geometries have been developed. Multitubular catalytic reactors are commonly used as primary reformers and in processes such as ammonia synthesis and dehydrogenation of ethylbenzene to styrene (Fig.3.9).

Moving or fluidized-bed catalytic reactors differ from fixed-bed reactors in that the catalyst and reactants are both in motion. Motion of the catalyst is provided by gravity and, more typically, by drag forces imparted by the moving fluids. Advantages of fluidized-bed reactors include very efficient heat exchange, high solids mixing, and the potential use of a broad range of catalyst particle sizes, all of which improve reaction efficiency and product quality. Key disadvantages are the increased mechanical loads imparted to both the powder catalyst and the reactor materials of construction. Attrition of the powder catalyst requires ease of solids handling in the reactor design. Primary industrial applications of fluidized-bed reactors include heterogeneous catalytic gas-phase reactions, polymerization of olefins, homogeneous gas-phase reactions, gas-solid reactions, and biotechnology applications. Specific examples include carbonization and coking, roasting of ores, hydrocracking and desulfurization of heavy petroleum fractions, and hydrogenation of ethylene, to name a few.

One important application of the fluidized-bed reactor is catalytic cracking of long-chain hydrocarbons (Fig. 3.10). The cracking reaction is endothermic and involves the deposition of carbon onto the catalyst surface, which renders it inactive as it is transported up the riser aided by a mixture of vapors and cracking gas. The catalyst is continuously discharged from the reactor and regenerated in an air-fluidized regenerator bed after passing through a stripper. In the stripper, steam is admitted to remove hydrocarbons adhering to the catalyst. In addition to revitalizing the catalyst, the regenerator simultaneously furnishes heat for the cracking reactor. Regeneration of the spent catalyst improves as temperature increases and is limited only by the temperature capability of the catalyst and regenerator materials. Typical temperatures in the reactor are 480–540°C, with regenerator temperatures approaching 800°C. These reactors

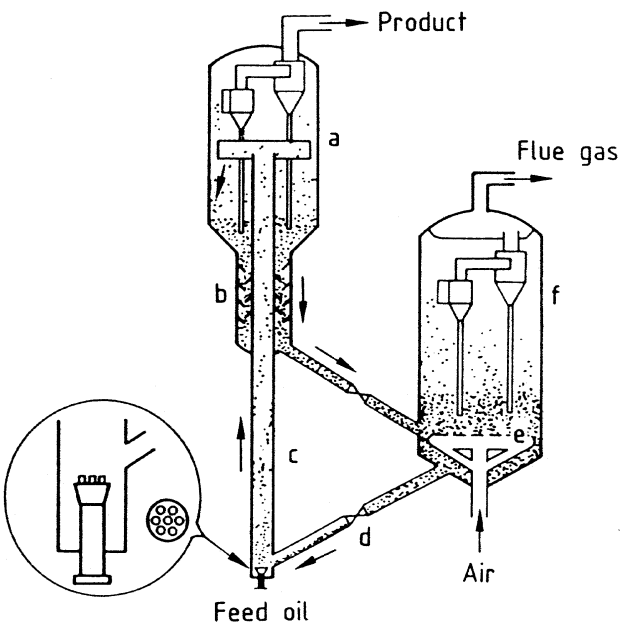

Fig. 3.10. Fluidized catalytic cracker showing (a) reactor, (b) stripper, (c) riser, (d) slide valve, (e)air grid, and (f) regenerator . *Source:* F.Ullmann, *Ullmann's Encyclopedia of Industrial Chemistry,* 5th ed., VCH Publishers, New York, 1985.

are generally large (0.3–1.5 m in diameter). Because of the high wear, high temperatures, and highly corrosive environment (caused by mixtures of hydrogen, sulfur, vanadium, and oxygen), fluid catalytic cracking units (FCCU) are rebuilt every 3 to 5 years. Primary areas of high wear include the cyclone, catalyst transfer lines, and slide valve used to control the catalyst flow. About 2,000 to 3,000 FCCUs are in operation around the world.

Ceramic material applications in reactors are currently limited to sensor protection (thermocouples and ultrasonic), catalysts (fluidized- and fixed-bed), and metal vessels, stirrers, baffles, etc., that are currently lined with glass, refractories, and other ceramic coatings. An example of a ceramic refractory-lined fluidized reactor is shown in Fig. 3.11. In limited cases where the risk of catastrophic failure is low, simple tubular reactors have used monolithic ceramic or glass reaction vessels. Numerous opportunities are believed to exist for structural applications of advanced ceramics where processing conditions being used or considered limit the life of available materials. Examples include stirrers, reaction vessel liners, low-attrition fluidized-bed catalyst, cyclone particle separator structure, gas feeds, water-cooling feeds, tubular reactors, fluidized-catalyst cracker structure, internal reactor support structure, and fixed-bed catalyst.

Reactors use a combination of vertically and horizontally oriented components internally that must be supported while operating under the harshest conditions of high temperatures and highly corrosive atmospheres. As processing conditions become more severe, the support structures approach the limits of their load-carrying ability even when increased in size. Because of their natures, support structures are frequently uncooled. One example is pipe hangers used to carry horizontal tubes in large refinery oil preheaters. Whereas in many heat exchangers and tubular reactors tubes are oriented vertically because of the poor structural properties of available metals at high temperatures, pipe hangers are still used for S-shaped pipes to increase residence times. Vertically oriented tubes use pin and clevis, tubesheets, or other configurations that are generally temperature limited. Advanced ceramics provide an opportunity to increase processing temperatures while potentially reducing the size and weight of the support structure.

In fluidized-bed reactors, cyclones are commonly used to separate solids entrained in flue gases and product streams for complying with regulations, recycling, or improving product quality. These cyclones can be as large as 3 m in diameter and 9 m in length. Typical gas inlet temperatures are 800–900°C and thus require the use of expensive exotic metals. To compensate for high wear, thickness is added in select areas. Precoolers can be used to reduce inlet gas temperatures and allow the application of lower cost metals, but the precoolers are easily fouled. In some instances the product stream must be reheated for further processing. Monolithic ceramics (Al_2O_3, SiC, AZS), which are frequently used for smaller parts, lack the desired toughness for larger parts. Ceramic coatings, which have been considered for larger parts, generally spall or wear prematurely due to thinness. Moreover, although refractory linings have also been considered, they wear prematurely or fail mechanically. Advanced ceramics provide an opportunity for cyclone designs that are lighter weight, more reliable and better able to operate at high temperatures without precooling.

The use of ceramic materials in tubular reactors has been of increasing interest, especially for steam reformers because of the projected energy savings when producing ethylene, methane, or ammonia. It has been estimated that the application of advanced ceramic tubes in a steam reformer producing synthesis gas (a mixture of hydrogen,

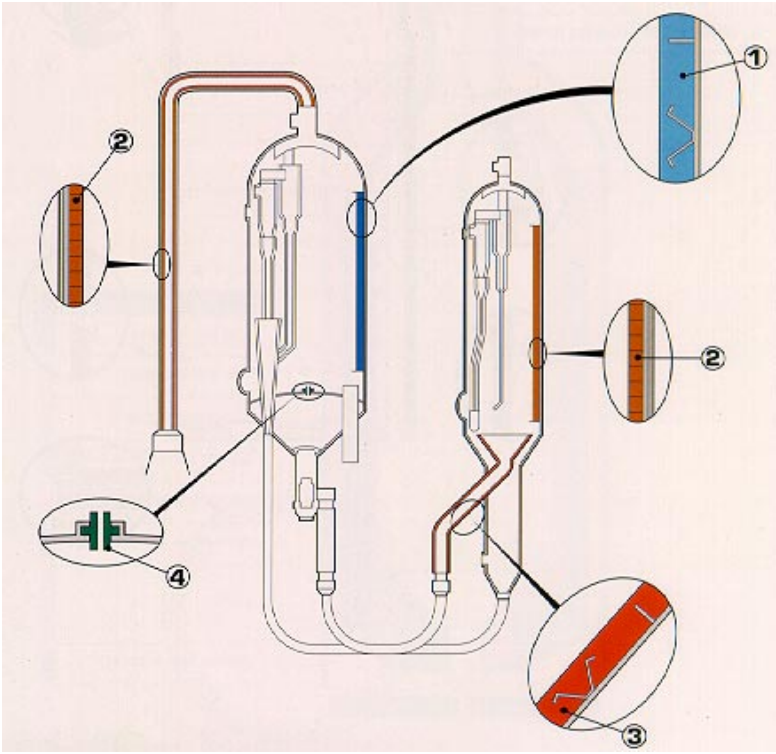

Fig. 3.11. Refractory ceramic use in a fluid catalytic cracker unit.
Source: Sales brochure on petrochemicals, Saint-Gobain / Norton High-Performance Refractories, Worcester, Mass.

carbon monoxide, and steam) has the potential to reduce feedstock consumption (15%), reduce burner gas consumption (15%), reduce weight (50–60%), reduce CO_2 emissions, provide energy savings (1400–2400 billion Btu / year per 1,000 ton / d methane production), and reduce the reactor footprint (50–75%). Details of the processing conditions are shown in Fig. 3.12. Current reformer tubes are Ni- and Cr-containing metals with an average cost of \$0.60 / cm^3 and operating limits of 870°C and 2 MPa for methanol production and 800°C and 3.5 MPa for ammonia production. By increasing the reaction temperature from 870°C to 1040°C, the hydrocarbon conversion efficiency increases from 86% to 99%. Pressures in steam reformers can range from a low of 0.3 MPa to as high as 10 MPa. Tube size ranges from 3 to 5 cm in diameter and 6 to 12 m in length. Heat is generally provided by natural gas combustion, with tube temperatures on the firing side approaching 1300°C. Tube fouling caused by coking is a frequent occurrence because petroleum products react with metal alloying species at elevated temperatures. In addition to impeding flow, local coking can cause tubes to fail prematurely due to hot spots. Plant shutdown is currently required every 20–100 days for decoking by the injection of harmful chemicals or steam. A typical plant has 16 reactors with 200–300 tubes per reactor.

Ceramic coatings that have been evaluated for use in steam reformer tubes generally fail by spallation. Ceramic-lined pipes are being considered, but the added cost is 2–3 times that of the metal pipe being replaced. Under DOE sponsorship, a number of advanced ceramic materials have been laboratory tested for potential use in steam reformers. In keeping with the cost goal of \$76 / kg, ceramic materials considered were limited to the monoliths and discontinuous reinforced ceramics. It was concluded that nonoxide ceramics generally degrade much faster than oxide ceramics when exposed to high temperatures in the presence of moisture and may not provide the desired life and reliability without a suitable coating. Oxide ceramics failed to provide the desired resistance to thermal cycling except when used in composite forms. SiC was found to significantly reduce coke fouling. Similar results have recently been reported for SiC-based fiber-reinforced ceramic composites.

Opportunities for advanced ceramics for use in chemical processing reactors are summarized in Table3.1.

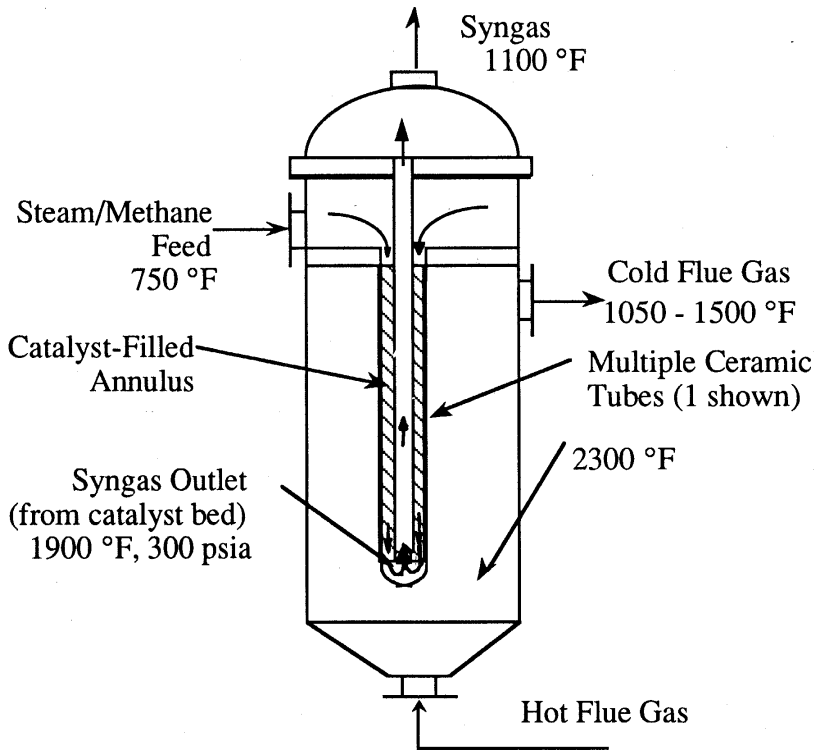

Fig. 3.12. Ceramic steam/methane reformer concept. *Source:* Proceedings of the U.S. Department of Energy / Advanced Heat Exchanger Program Review, Summary Report DE92014385, DOE Office of Industrial Technologies, 1992.

Table 3.1. Opportunities for advanced ceramics in chemical processing reactors

Application	Industry needs	Opportunities for ceramics
Catalyst supports for fixed-bed reactors	Reduced corrosion, high-thermal-shock resistance	Honeycomb-type ceramic matrix composite structure with low pressure drop
Hangers for tubular reactors	Reduced weight, higher temperature capability	Ceramic matrix composites
Catalyst transfer lines, valves, and cyclones for fluidized catalytic crackers	Reduced wear, increased corrosion resistance, increased temperature capability	SiC ceramic matrix composites for cyclones and transfer lines, monoliths or cermets for valves
Reformer tubes	Reduced fouling, higher temperature capability	SiC ceramic matrix composites
Stirrers for stirred-tank reactors	Reduced wear and corrosion	Cermet, ceramic matrix composite
Catalyst for fluidized-bed reactors	Reduced attrition	Incremental improvements, composite formulations in granular form
Water cooling feeds for stirred-tank reactors	Reduced corrosion	Ceramic matrix composites
Sensor shields	Increased durability	SiC ceramic matrix composites
Reaction vessel liners	Reduced wear and corrosion	Ceramic matrix composites with reduced number of joints
Spray nozzles	Reduced wear	Nonoxide ceramics, ceramets

3.3HEA T EXCHANGERS

Heat exchangers are used throughout the chemical industries for transferring thermal energy between two or more fluids that differ in temperature. Typical applications involve heating or cooling of a fluid stream, evaporation or condensation of single or multicomponent fluid streams, and heat recovery or rejection from a system. In other applications, the purpose is to heat, cool, condense, vaporize, fractionate, distil, concentrate, crystallize, or control process fluids. Frequently heat exchangers are preferred over direct heating to maintain more precise and uniform heating. According to a U.K. study conducted to determine the source of energy consumption in the chemical industries, process heating is the single largest source and accounts for 40% of the total energy consumed. Recovery of waste heat from the process streams (e.g., the outlet from a reactor) or waste streams (e.g., a flue gas stream) is therefore the single most widely used approach for improving energy efficiency in chemical industries. Once sources of heat are identified, they are coupled with heat sinks when appropriate. Heat sinks may include reactor feeds, combustion air, or boiler feed water. High-pressure and -temperature conditions are generally present in processing streams and low-pressure and high-temperature conditions are typical of waste streams.

The type of heat exchanger selected depends on what the fluid media are and whether the fluid media are in direct contact or separated by a heat-conducting wall. Common types of heat exchangers classified by construction include tubular, plate-type, extended surface, and regenerative (Fig. 3.13). Heat exchangers where the flows do not mix are referred to as direct transfer type or recuperators. Heat exchangers in which there is an intermediate flow of heat from the cold and hot fluids are referred to as indirect transfer type or regenerators. Selection criteria for heat exchangers include pressure, temperature, fluid characteristics, size, temperature differential, and pressure drop. Heat exchangers used in the chemical industry can be very large, with sizes up to 31 m.

Tubular heat exchangers are the most widely used because of their versatility. Tubular heat exchangers are generally built of circular tubes, although elliptical and square geometries have been used. Considerable design flexibility is possible with the core geometry, which can be varied easily by changing the tube diameter, length, and arrangement. Tubular heat exchangers can be made to operate with any processing condition and with any combination of fluids; the possibilities are limited only by the materials of construction. Tubular heat exchangers can be further classified as shell-and-tube, double pipe, spiral, and tube-coil exchangers. Of these, shell-

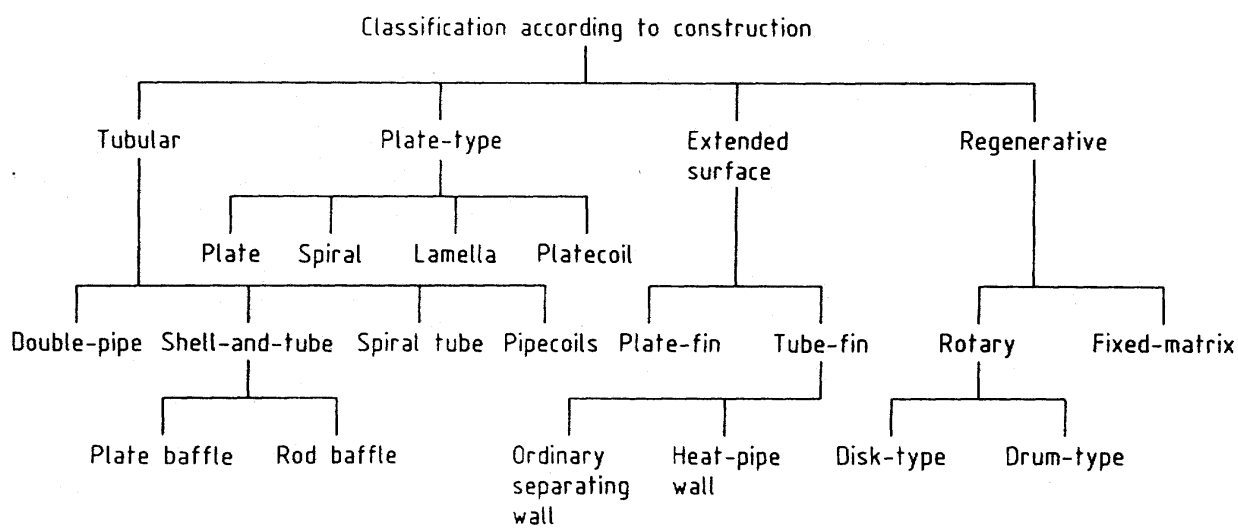

Fig. 3.13 Heat exchanger configurations commonly used in the chemical industry. *Source:* F.Ullmann, *Ullmann's Encyclopedia of Industrial Chemistry*, 5th ed., VCH Publishers, New York, 1985.

and-tube exchangers are the most versatile in chemical processing, with any combination of gas, liquid, condensing or evaporating fluid, or two-phase fluid used on one or both sides. Operating pressures can vary from vacuums to pressures greater than 14MPa. Operating temperatur es can vary from cryogenics to 1000°C, which is the limit for most metals used. A key disadvantage of shell-and-tube exchangers is high cost.

Shell-and-tube heat exchangers are composed of round tubes mounted in a cylindrical shell with the tube axis parallel to that of the shell. One fluid flows inside the tubes and the other flows across and along the tubes. The major components are tubes, or tube bundle, shell, stationary or front head, rear head, baffles, and tube sheet. A cross-section of a tube-and-shell heat exchanger is shown in Fig. 3.14. A variety of constructions are used depending on the desired heat-transfer and pressure-drop performance and the methods used to reduce thermal stresses, prevent leaks, provide ease of cleaning, contain operating pressures and temperatures, and control corrosion. Tube-and-sheet heat exchanger design guidelines have been established by the Tubular Exchanger Manufacturers Association. Standard plain tube size ranges from 6.4 to 50.8 mm. Standard nominal tube wall thickness ranges from 0.81 to 3.4 mm, with steel tubes being slightly thicker. Standard tube length ranges from 1.8 to 6.1 m, although tubes up to 24 m have been used. The number of tubes is based on the flow rate and allowable pressure drop. Tubes are fastened to the tube sheets by welding or mechanical attachments. Baffles are placed inside the shell to control flow, support the tubes, and protect the tubes near the side-entry inlet from erosion, cavitation, and vibration from the impact of high-velocity flows. The front-end head is stationary while the rear-end head can either be stationary or float to accommodate thermal stresses.

Shell-and-tube heat exchangers can also take the form of large horizontal tubes placed horizontally across mortar brick walls lined with refractory. The horizontal pipes are generally supported by uncooled hangers to reduce creep. This type of exchanger can be used to preheat combustion air using process flue gas or preheat oil in a petrochemical plant using natural gas or oil-fired combustion. Tubes for preheating oil in a petrochemical plant are typically 20 cm in diameter and 3–12 m long for straight sections often connected with 180° bends. Pressures range from 275 to 689 kPa, and temperatures range from 540 to 1371°C. The number of tubes in a typical petrochemical plant ranges from 100,000 to 200,000.

A common source of heat exchanger tube failure is fouling. Fouling occurs over a period of time as solids are deposited on heat transfer surfaces. This layer of solids adds an additional resistance to heat flow and causes local hot spots, can increase the resistance to fluid flow, and can increase in thickness to the point of applying loads to adjacent tubes in parallel tube exchangers. The accumulation of solids can occur from precipitation of dissolved substances (scaling or sludge), settling of particulates on the surface (sedimentation), reaction of solids (coking), biological reactions (algae growth), or freezing on a cooled surface. Fouling increases capitalization

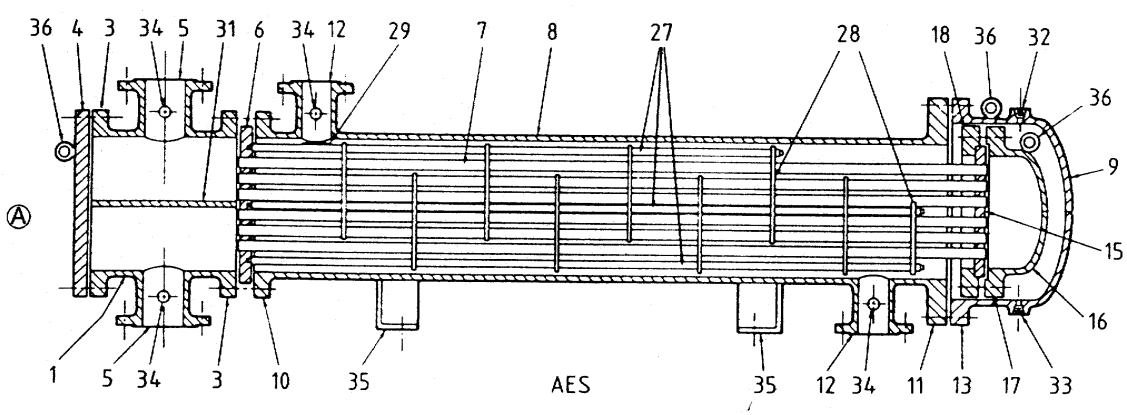

Fig. 3.14. Example of a shell-and-tube heat exchanger. *Source:* F. Ullmann, *Ullmann's Encyclopedia of Industrial Chemistry,* 5th ed., VCH Publishers, New York, 1985.

and maintenance costs and results in losses in production and energy. Fouling promotes corrosion, plugging, and failure of uncleaned heat exchangers. Many factors affect fouling rates such as temperature, fluid velocity, concentration, and surface material and its condition, in addition to specific mechanisms influencing the class of fouling involved. As mentioned in the discussion on reformers, silicon carbide has been shown to reduce coke fouling produced from the chemical reaction of hydrocarbons with the hot tube surface. Ceramics in general are also expected to reduce fouling caused by scaling.

In addition to possessing the desired heat, corrosion, and erosion resistance, heat exchanger tubes must be impermeable to the liquids and gases being contained under pressure. High-alloy steels (Alloy 625) are widely used for heat exchangers, and centrifugal cast tubes are used for large petrochemical preheaters and boilers. The general mode of failure for metal tubes is creep, corrosion, or erosion from fly ash when exposed to coal combustion. To reduce failure from erosion, tubes can be protected with ceramic or metal tube shields that are applied locally in areas of high wear. Exotic metals, such as tungsten and tantalum, are used in high-corrosion and high-temperature applications. The high cost of these exotic metals frequently leads to thin-wall designs and problems with leaks, collapsed tubes, and mechanical damage. Teflon has also been used because of its high chemical resistance but the low thermal conductivity also requires thin-wall designs. Graphite heat exchangers are also widely used in corrosive applications, but cracks that occur (because of their brittle nature) are difficult to locate and repair. Silicon-free silicon carbide is increasing in acceptance for highly corrosive and high-temperature applications even though its cost remains high when compared to that of conventional metal heat exchangers. However, when compared to the cost of an equivalent tantalum heat exchanger, the cost is actually 30% lower. SiC tubes up to 0.8 m in diameter are available and can be used to temperatures of 1500°C and pressures of 550 kPa. An example of a shell-and-tube SiC heat exchangers is shown in Fig.3.15. For this application, teflon tube sheets and tube mounting hardware are used. Tube-to-tube-sheet joints are a frequent source of failure when advanced materials are used under severe operating conditions.

Opportunities for advanced ceramics for use in chemical processing heat exchangers are summarized in Table 3.2.

Fig. 3.15. Tube-and-sheet SiC heat exchanger.
Source: Sales brochure, Saint-Gobain / Carborundum Corporation, Niagra Falls, N.Y.

3.4 SEPARATION

The separation of solid, liquid, and gas mixtures occurs throughout the chemical-processing industry. Examples include the removal of liquids from solids before final drying by the application of heat, the removal of fine solid particle contaminants from liquid or gas process streams to improve quality and increase yields through recycling, and the separation of gas phases at the molecular level. A variety of devices are available for separation. Equipment selection is based on the medium, concentration, and particle or molecular size of the separated phases. Frequently the environment is very aggressive because of elevated temperatures and increased wear and corrosion. The classification of equipment available for solid-liquid separation is shown in Fig. 3.16. Similar devices are used for solid-gas separation. The classification scheme used is based on the driving force used for separation and the motion of the phases to be separated. Solid-liquid separation processes are basically classified into sedimentation apparatus and filters. This classification is not always unambiguous because a large number of devices use both mechanisms.

Sedimentation processes include gravity, centrifugal, and hydrocyclones. Separation by

Table 3.2. Opportunities for advanced ceramics in chemical processing heat exchangers

Application	Industry needs	Opportunities for ceramics
Heat exchanger tubes	Increased durability and temperature capability, increased silicon carbide (SiC) size capability, reduced fouling	Silicon-free SiC/SiC ceramic composite
Tube shields	Increased durability and life	Low-cost ceramic composite (SiC/Al_2O_3 or SiC/SiC)
Heat exchanger headers	Increased durability	Silicon-free SiC/SiC ceramic composite; requires joining technology
Cross-flow heat exchanger	High-temperature and corrosion capability	Low-cost ceramic composite or cermet using sheet forming processes

Transport mechanism		Free motion of dispersed particles	Free motion of liquid
Designation		Sedimentation Flotation	Filtration
Driving forces	Gravity	Thickener/Clarifier	Screen drainage Dewatering screens Hydrostatic filter Microstrainer
	Pressure gradient		Cake filter Pressure filter Vacuum filter Capillary filter Expression device Deep bed filter Cross-flow filter Strainer
	Centrifugal field	Static wall Hydrocyclone Rotating wall Solid bowl centrifuge Rim centrifuge Scroll discharge centrifuge Disk-type centrifuge	Centrifugal filter Peeler centrifuge Continuous solids discharge
	Electric field	Electrophoresis	Electro-osmosis
	Magnetic field	Low-field magnetic separator High-gradient magnetic separator	

Fig. 3.16. Equipment used for solid-liquid separation. *Source:* F. Ullmann, *Ullmann's Encyclopedia of Industrial Chemistry*, 5th ed., VCH Publishers, New York, 1985.

gravitational sedimentation, the simplest and lowest cost process, is generally limited to dilute suspensions that, although potentially corrosive, are generally processed at low temperatures that allow the use of low-cost metallic or polymeric materials. In addition to corrosion, wear is a factor in selecting materials because of the fluid motion present in continuous centrifuges. Although higher cost ceramic liners and coatings are available, their use is generally limited to hydrocyclones where wear can be very high.

Hydrocyclones are simple liquid-solid separation devices that are low cost and provide sharp phase separations in a centrifugal field. Hydrocyclones are commonly used as prestages for concentrating dilute suspensions ahead of a filter, partial clarification, degritting, desliming, recovery of fine particles, or stream sorting. The diameter of a hydrocyclone can range from 40 to 500 mm. The heavy wear that occurs throughout the interior of a hydrocyclone affects the operating cost and the quality of the process stream as a result of contamination from the hydrocyclone materials of construction. The simple construction and lack of rotating parts allows the hydrocyclone to be made of a variety of materials to combat wear

and corrosion. Alumina is widely used in hydrocyclones because its cost is lower and its wear and corrosion resistance are superior to those of competing metals.

A large number of different filters are available in the market today for the separation of solids from gas or liquids while under the influence of a pressure gradient. Examples include the filtration of final product to remove reactants, recovery of catalyst from flue gas in catalytic reactors, and ultrafiltration of liquid suspensions with particles down to nanometers in size. Filters must withstand variations in the process stream chemistries, the nature and loadings of particles contained in the process stream, and temperature and pressure of the process stream—all while maintaining high particle removal efficiencies, high flow capacity, and relatively low pressure drop from flow characteristics. Additionally, the filters must have long-term structural stability because of stresses produced at points of attachment; loads applied by pulsating pumps; and exposure to vibrational, mechanical, and thermal stresses during the removal of collected solids by reversed flows or mechanical impact. They also must show resistance to particle impact (erosion) and corrosion, both of which result in loss of material strength during filtration and contamination of the process stream. Finally, the filters must be chemically inert to collected solids in order to prevent adherence of fines that might lead to pore plugging and reduction of process stream flow.

Filters used for filtration of suspensions with low solids loading are generally disposable, whereas those used to filter highly loaded suspensions are repeatedly cleaned during use. Polymeric filtering media are commonly used. Ceramic media are used where harsh conditions exist, such as high temperatures, corrosive process streams, and many organic solvents. Ceramic filters are used alone or supported by stainless steel backings for applications where ceramic materials cannot support anticipated loads. Materials commonly used include Al_2O_3, ZrO_2, and SiC, but with these cracking is a common source of failure. A number of ceramic composite materials (SiC, mullite, and Al_2O_3 matrix) having improved durability are currently being evaluated for use in the production of chlorosilane to improve quality and recover silicon.

Gas separation membrane technologies both compete with and complement traditional gas separation technologies such as cryogenic distillation and selective adsorption or absorption. Advantages of this technology include reduced device size, design flexibility, lower capital investment, and lower energy use. A key disadvantage is lower separation efficiency. Typical applications include the production of nitrogen from air; hydrogen recovery from refinery, petrochemical, and ammonia purge streams; and carbon dioxide removal from natural gas streams. Criteria for the selection of membrane materials include permeability, selectivity of permeability, formability into the desired geometry, and ultimately cost. A typical geometry is shown in Fig. 3.17. A thin membrane is attached to a porous support layer either in a planer or cylindrical geometry. Most materials in use today are glassy polymers that lack the desired level of selectivity and permeability and cannot be placed directly into the process stream operating at high temperatures. Inorganic materials that transport by molecular sieving or surface diffusion have markedly higher selectivity and permeability but are not easily formed into the desired geometry and are much higher in cost than current polymer systems. One example is the use of perovskite oxides [$(La,A)(Co,Fe)O_{3-z}$ where A = Sr, Ba, Ca)] for separating oxygen from air. Airborne oxygen dissociates and is conducted in the perovskite structure via oxygen vacancies toward the lower oxygen partial pressure side. Geometries are sought for inorganic membrane materials and may require ceramic composite supporting layers for improved durability.

Monolithic ceramics have demonstrated their utility in many separation applications. Even though robust processes have been demonstrated when using often fragile monolithic ceramic materials, further improvements in durability are sought. Ceramic composites having improved durability are just now being evaluated for separation, but their cost remains a barrier to market acceptance. Opportunities for advanced ceramics for use in chemical processing separation are summarized in Table 3.3.

3.5 FLUID HANDLING

Devices for fluid handling include valves, fans, pumps, and transfer pipe used to meter, boost, or transfer liquids, gases, and solids entrained in liquids and solids between processes occurring in a chemical plant. Similar devices are used to move reactants to process feeds, final products to storage or directly to customers, and waste streams. The fluids handled can vary broadly, and temperature and pressure are limited only by a device's

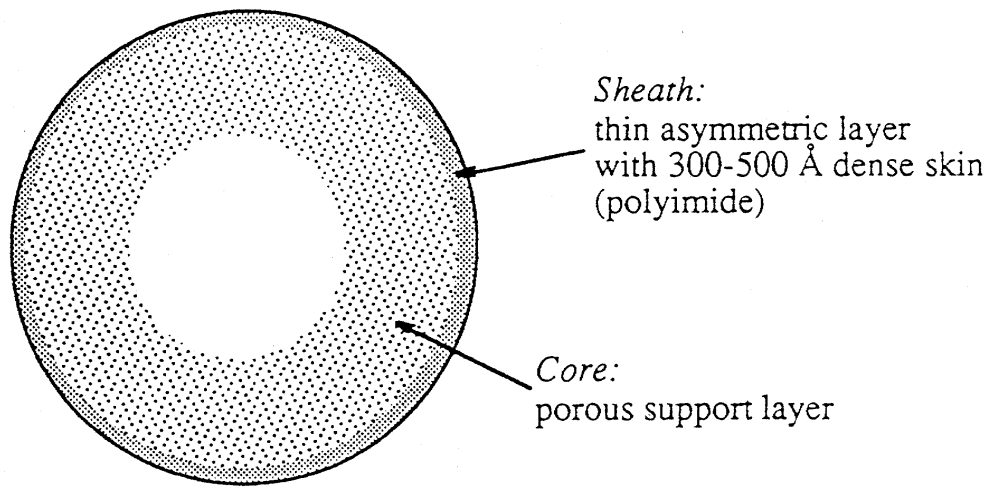

Fig. 3.17. Example of a gas permeable membrane concept. *Source:* I. C. Roman, "Membranes for Nitrogen Generation—Recent Advances and Impact on Other Gas Separations," Seminar on the Ecological Applications of Innovative Membrane Technology in the Chemical Industry, Cetraro, Calabria, Italy,

Table 3.3. Opportunities for advanced ceramics in separation

Application	Industry needs	Opportunities for ceramics
Filters for solids separation from gas or liquid process streams or flue gas	Improved temperature, wear, and corrosion capabilities; improved durability	Both oxide and nonoxide ceramic composites, with the composition selected on the bases of the process stream
Support for gas permeable membranes	Improved temperature, wear, and corrosion capabilities; improved durability	Both oxide and nonoxide ceramic composites, with the composition selected on the bases of the process stream

materials of construction. Primary modes of failure are corrosion and wear, with the latter limiting process control. Reliability is generally a problem.

Pump types include diaphragm, gear, centrifugal, and piston. Materials commonly used for fluid contact include siliconized cast iron, Hastealloy, tool steels, and tantulum. Siliconized cast iron is inexpensive and easily replaced. Many pumps are plastic or ceramic lined to reduce wear or corrosion. Full body porcelain and glass have been used for specialty pumps where corrosion is severe but cost is high, and they are easily damaged due to the lack of toughness. Ceramic (SiC, Si_3N_4, Al_2O_3) seals, shafts, bearings, bushings, and impellers are frequently used in areas of fluid contact when corrosion and wear are high. Although graphitic materials have also been used, they have low tolerance to wear, are low strength, readily oxidize, and are brittle. While still brittle and higher in cost, SiC and Si_3N_4 overcome many of the disadvantages of graphitic materials. Although Al_2O_3 is a lower cost solution when compared to SiC and Si_3N_4, it also has low strength and poor thermal shock resistance. Whereas wear and corrosion performance are generally adequate, higher toughness internal ceramic pump components are sought. Cost comparable to that of a pump produced from Alloy 20 (medium nichol alloy steel) is desired. Nonconductive ceramic pump housings, because they eliminate the eddy currents normally generated by conductive metal housings, have also proven beneficial for magnetically driven pumps. Fiber-reinforced ceramic composites (SiC / SiC) that have been evaluated for magnetic drive pump housings currently fail to meet the requirements for permeability. Centrifugal type pumps range in size from 12 to 36 cm.

Valve types include ball and plug design valves, gate or slide valves, and butterfly valves (Fig. 3.18). For precise flow control of reactants, metering valves are used. Materials are similar to

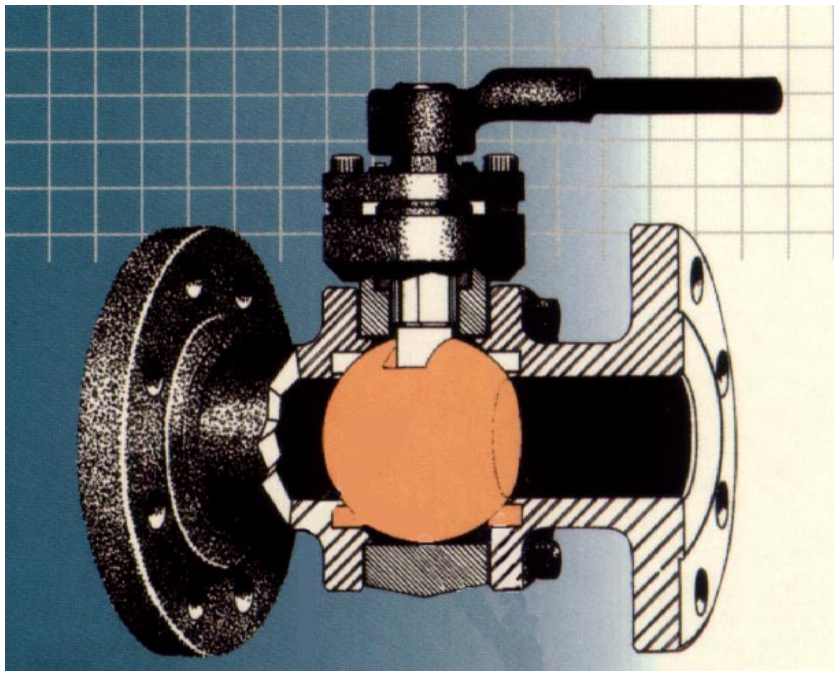

Fig. 3.18. Ball valve with a ceramic-coated ball and ceramic seats. *Source:* Sales brochure, Praxair Surface Technologies, Houston, Tex.

those used in pumps including the application of ceramic coatings and monolithic ceramics. Although Al_2O_3 has been used for ball valve seats, it failed because of thermal shock. Si_3N_4 used for both the ball and seat shows little wear when compared to hardface-coated metals under corrosive conditions. Al_2O_3/Al/SiC ceramic composites are found to double the life of ball valves under highly abrasive service. Typical valve size ranges from 5 to 25 cm for ball types and 0.9 to 1.5m for butterfly type with current temperature design limits of 900°C for conventional materials. Although current ceramic materials provide the desired level of temperature capability and corrosion and wear resistance, improvements in durability are sought, especially for larger valves.

Transfer pipes are typically metal alloys with polymer or ceramic refractory linings for reduced wear and corrosion. Ceramic refractory linings are used when the retention of process heat is desired as the fluids are moved from one reactor to another. Abrasive fluids also remove the protective passive layers formed on metal pipes and thus limit their use. Refractory linings maintain the metal pipes to temperatures less than 250°C during operation, and this process condition allows the use of lower cost carbon steel alloys. For additional protection, some designs incorporate stainless or high-alloy-steel inner liners over the refractory to prevent loss of the refractory by spallation, reduce chemical attack of the refractory, and reduce the risk of leakage of corrosive media to the backside of the refractory where it can attack the less corrosion resistant metal outer tube. Materials used in metal pipes cost $17–$22/kg. When compared with finished metal pipe, refractory-lined pipe costs two to three times more. Plastic-lined pipes are only slightly more expensive than metal pipes, but their use is limited to low temperatures and nonabrasive fluid. More complex pipes with inner metal liners over the refractory cost on the order of $8,000 per linear meter for pipe diameters of 0.2–0.4m. Pr ocess conditions and pipe dimensions vary based on the process. For example, pressures can approach 7MPa, and pr ocess gas temperatures can approach 1000°C when used between the primary and secondary reformers of a two-stage steam reformer. Dimensions can reach 60 m in length with diameters approaching 1.5 m. At these temperatures, fouling of hydrocarbon gases or liquids can occur and create hot spots that reduce life. Runs are generally limited when retention of heat or entrainment of solids is desired.

Fans are used to move dust-laden flue gas, provide clean air to reactors for processing, or move corrosive gases in scrubbers. Fans are constructed from exotic metals, polymer

composites, titanium alloys, or tungsten carbide–coated steels depending on the gas composition, pressure, and temperature. Ceramic coatings are used to enhance the wear and corrosion resistance. Fan size can vary between 0.6 and 2 m in diameter.

Opportunities for advanced ceramics for use in chemical-processing fluid handling are summarized in Table 3.4.

3.6 FINISHED PRODUCT MANUFACTURING

As the chemical industry has grown, there has been a strong tendency for integration both forward and backward. Petroleum producers have found opportunities with their products to move forward into chemical manufacturing. Similarly, chemical producers have found opportunities with their products to move forward into finished products or have desired to move backward to ensure access to critical raw materials. In the case of polymers, producers have moved forward to produce finished products such as films, fibers, and consumer items. While many finished products are provided by the chemical industry, polymer-derived products are of particular interest because of the current use of advanced ceramics in their production and the potential for expanded use as demands for increased quality and productivity occur.

Consumer Items

Polymers can be divided into two categories of materials: thermosetting and thermoplastic. Thermoplastics are materials that become fluid upon heating above a certain temperature. Upon cooling, they again become rigid. This process, which can be repeated many times without damage to the polymer or its properties, allows for recycling. Unlike thermoplastics, thermosetting polymers may normally be reheated from the fluid state only once. The chemical structure of the thermosetting polymer is altered by heat, and the heat-induced alteration prevents resoftening. Compression and transfer molding are commonly used to produce molded parts from thermosetting polymers. Thermoplastics can be compression molded; or when more economical, higher production rates are needed, injection molding or extrusion is used. Polymers used for coatings are applied through nozzles. Common thermoplastics include polyethylene, polyvinyl chloride, nylon, and polystyrene. Common thermosetting polymers include polyurethanes, phenolics, and epoxies.

TiC-coated metal and partially stabilized zirconia (PSZ) knives are currently used for cutting styrofoam and shredding recycled thermoplastic. These knives can be bed cutters or, for greater capacity, rotary cutters. Although life of the ceramic knife has been improved over that of the metal alone, greater wear resistance and toughness is desired. Material failures, such as chips, must be detectable for quality control. Nonoxide composites or cermets are ideal candidates because of their high hardness, increased toughness, and electrical conductivity properties. Other applications where advanced ceramics could provide a benefit are spray nozzles and extrusion molds having reduced wear, and these products provide improved dimensional stability. A spray nozzle cost of $5,000 is considered acceptable when the desired service life and product quality can be met.

Table 3.4. Opportunities for advanced ceramics in chemical processing fluid handling

Application	Industry needs	Opportunities for ceramics
Pump housings	Nonmagnetic housing with high-temperature capability, increased toughness	Coated or filled silicon carbide (SiC) ceramic matrix composite
Pump seals, shafts, impellers, seat	Increased toughness with wear and corrosion of SiC and silicon nitride (Si_3N_4)	Si_3N_4 or SiC discontinuous reinforced-ceramic composites
Valve seats, inserts, and bodies	Increased toughness with wear and corrosion of SiC and Si_3N_4	Si_3N_4 or SiC discontinuous reinforced-ceramic composites
Transfer pipes	Reduced complexity and increased durability when compared to refractory-lined metals	Ceramic matrix composites, laminated ceramic/metal or functionally graded ceramic to metal
Fan	Lightweight	Ceramic matrix composites

Film

A typical process for producing polymer film is shown in Fig. 3.19. Molten polymer is extruded into a die where it is formed into a balloon by injecting air. Air is maintained in the balloon, and once at the top of its path, the film is closed by a set of pinch rollers. Film up to 40 ft wide is routinely made by this process in very high volumes. Feedscrews used to feed the hot extrusion die are ceramic coated to reduce wear and maintain dimensional stability of the film through process control of polymer flow. Flattening and pinch rolls are also ceramic coated to maintain surface quality of the thin film. Ceramic coatings used include titanium carbide, tungsten carbide, or chromium oxide. Coatings are seen to fail from corrosion resulting in surface flaws, porosity and spallation, all of which are a source of defects in the polymer film produced. Film-producing machines are frequently open face and result in safety issues when ceramic coatings used are not reliable. A single machine may use as many as 20 rollers, each of which is typically 30cm in diameter and 1.5–4.0 m in length.

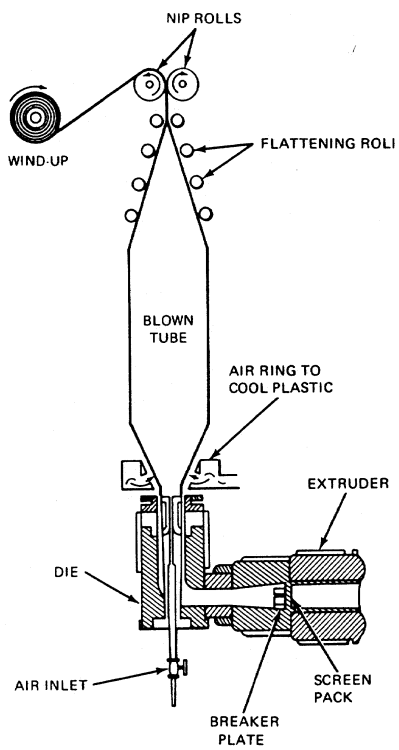

Fig. 3.19. Formation of polymer sheet by extrusion through a circular die. *Source:* E. R. Riegel and J.A. Kent, *Riegel's Handbook of Industrial Chemistry,* 8th ed., Van Norstrand Reinhold Company, New York, 1983.

Fiber

Three methods exist for producing man-made textiles: wet spinning, dry spinning, or melt spinning. Wet spinning is the oldest and most established of the three processes. A polymer is first dissolved in an appropriate solvent. This solution is forced through fine holes with diameters of 0.03 to 0.05 mm in the face of a spinnerette, which is submerged in a bath containing a fluid that makes the polymer precipitate. Pressure for moving the polymer solution through the spinnerette is provided by a high-pressure metering pump. To prevent plugging of the spinnerette, the polymer solution is first passed through a candle filter for removal of any small particles. As the solution passes through the spinnerette and comes into contact with the solution contained in the bath, it gels. This gel-like structure is not capable of supporting itself and remains in the bath until converted into the stable fiber. Once in fiber form, it can be safely removed from the bath and drawn to improve the properties, packaged into a combination of fibers called a yarn, twisted or otherwise intermingled to provide stability during handling, coated with various finishes, or cut into short-length staple fiber. Many of these postprocesses occur with the fiber in contact with guide surfaces, tensioning devices, or twisting devices that often operate at very high speeds and are coated with lubricants (Fig. 3.20). Although these lubricants reduce fiber-handling damage, they are generally corrosive to the metal or ceramic tensioning and guide surfaces.

In dry spinning, a solution of polymer is again extruded through a spinnerette, but heated air is used to "set" the fiber by volatilization of solvent as it passes vertically into a spinning cabinet. Postprocessing is similar to that used for wet-spun fiber. Melt spinning is used for thermoplastics and was first developed for use with Nylon. In this process, molten polymer is pumped directly from the polymerization step or dry polymer chip is fed into a heated extrusion-type screw that leads to a gear-type pump that provides both high pressure and a constant rate of flow to the final filter and spinnerette. Because of the higher viscosity of the molten resins, higher pressures are used, and the spinnerette is more durable and substantial than those used in wet and dry spinning. As the extruded fiber emerges from the spinnerette, it rapidly solidifies. Similar processes are used to produce carbon fiber with an additional postprocessing heat treatment. Aramid fibers are typically processed by dry spinning, with the

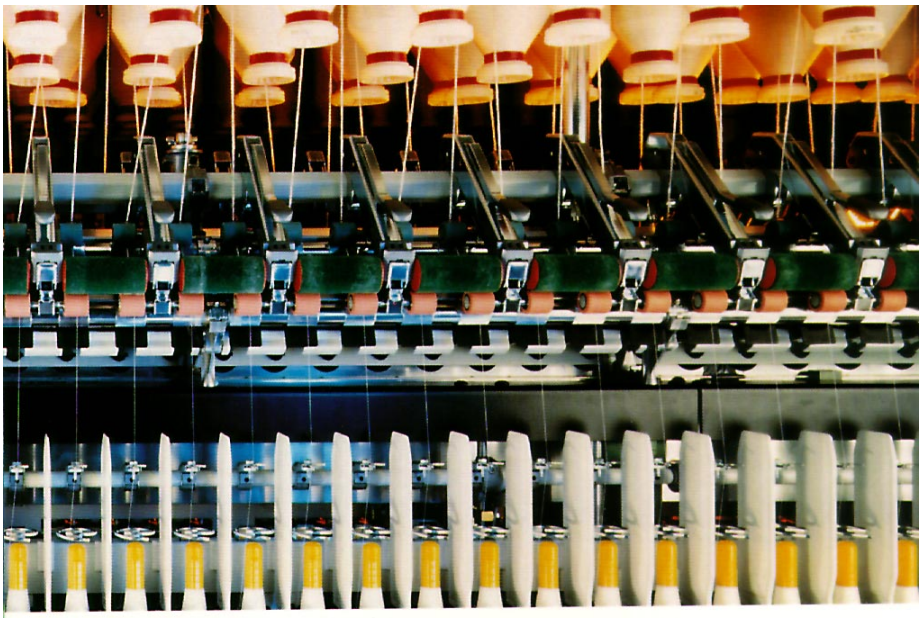

Fig. 3.20. Textile handling machine. *Source:* Sulzer Metco Holding AG, Wohlen, Switzerland.

exception of Kevlar, for which a hybrid wet/dry process is used. Glass fiber processes are discussed separately in Sect. 6.6 on the Glass Industry.

Today's yarn producers are seeking higher strength, improved dyeability, finer denier, and better consistency in finished fiber products. The limited capacity of some yarn production plants necessitates additional capitalization or increased throughput. Machine refinements continue to be adapted, but these refinements alone cannot provide the desired results. The best solution is considered to be improvements in handling materials to achieve increased corrosion and wear resistance. Additional requirements include high-thermal-shock resistance (to accommodate frequent cleaning during operation by cold air and torches) and machinability to high-dimensional tolerances and surface finishes (to accommodate the high surface speeds). Increased lifetime is also essential to limiting downtime for repair and replacement. Increasing use is being made of ceramic materials, which include Al_2O_3, PSZ, and Si_3N_4. Applications include traverse guides, draw pins, bulking jets, twist wheels, take-up and guide rolls, finish applicators, and interlace jets (Fig.3.21). Each machine uses thousands of these small handling devices, each ranging in cost from $200 to $1,500. While significant improvements in productivity (5–10%), life, and quality have been demonstrated through the application of ceramic materials, further improvements are sought. Fracture toughness has been identified as a high-priority need where chipping is a frequent source of failure. Because textile-handling machines are generally operated without shields, the application of ceramic materials having low toughness is limited to those plants where the risk of catastrophic failure is low.

Opportunities for advanced ceramics for use in chemical processing finished product manufacturing are summarized in Table 3.5.

3.7 COMMUNITION

Size reduction, also known as communition, is defined as the mechanical breakdown of solids into smaller particles without changing their state of aggregation. Products that have undergone size reduction—either as reactant feeds, intermediates, or final products—are common throughout the chemical industry. For example, to achieve a desired level of finish on paper, TiO_2 must first be milled to achieve the required particle size distribution. Throughputs in industrial size reduction range from a few kilograms to hundreds of tons per hour. Starting particles range in size from blocks several meters across to very fine particles having dimensions of only several microns. Size reduction is used either to modify the particle size or surface area and its distribution or to modify the integrity of a multiphase material and thereby simplify removal of a particular phase. The approach most commonly taken is to use

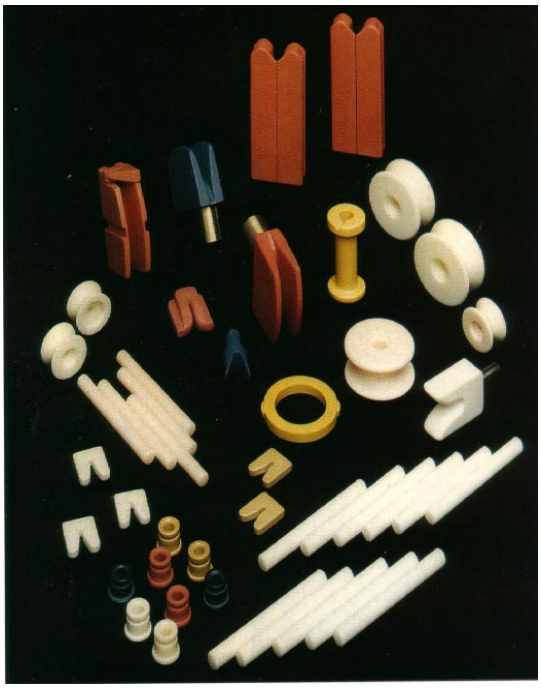

Fig. 3.21. Ceramic textile handling parts.
Source: Sales brochure, Kyocera Corp., Kyoto, Japan.

spherical milling media contained in a rotating cylinder. The cylinder can be plastic, elastomer or ceramic-lined metal, or ceramic, depending on the processing conditions and accepted level of contamination. Milling media can be metal, plastic, or ceramic. While metal milling media are the most economical, contamination involved with their use is generally not acceptable. Plastic milling media and cylinders are primarily used for mixing, not size reduction. Ceramic milling media with lined metal cylinders are the most common. Ceramic milling media available include Al_2O_3, ZrO_2, and Si_3N_4, in order of cost and resistance to wear from low to high. In general, milling media available today meet current demands and levels of allowable contamination. Some improvement in cylinder liner reliability is desired but is not considered a high-priority need.

Table 3.5. Opportunities for advanced ceramics in chemical processing finished product manufacturing

Application	Industry needs	Opportunities for ceramics
Film rollers	Improved reliability	Better adherent coatings, ceramic composite sleeves, or spray-formed graded cermet
Spray nozzles	Improved dimensional stability with longer life	Refractory boride or carbide monoliths
Knives	Increased life and improved toughness	Silicon nitride (Si_3N_4), cermets, or laminated ceramic composites
Extrusion molds	Improved dimensional stability with longer life	Discontinuous ceramic composite or laminated ceramic composite
Textile handling	Increased toughness, wear, and corrosion resistance	Cermets or graded cermet, improved Si_3N_4 or silicon carbide composites

3.8 REFERENCES

Publications

Bryan, P. 1977. "New Membranes for Industrial Applications: An End-User's Perspective," Argonne Petroleum Seminar Series, Argonne Natl. Lab., Argonne, Il.

"Ceramic Materials Benefit Textile Guide Components" 1955. *Ceramic Industry,* July 23–26.

Dapkunas, S. J. 1988. "Ceramic Heat Exchangers," *Ceramic Bull.* **67**(2) 388–391.

Foster, B. D. 1987. "Ceramic in Heat Exchangers—An Overview Update," *Ceram. Eng. Sci. Proc.* **8**(1–2), 75–80.

Gonzalez, J. M., Rebello, W. J., and Ferri, J. L. 1990. *Industrial Operating Experience of the GTE Ceramic Recuperator,* ORNL/sub/86-22044, GTE Products Corp., Towanda, Pa., and PAR Enterprises, Inc., Fairfax, Va.

Graham, R. G. 1987. "Progress Report on Field Testing of All-Ceramic Tube-in-Shell Heat Recuperators," *Ceram. Eng. Sci. Proc.* **8**(1–2), 81–84.

Hall, C. 1977. "High Temperature Particle Filtration – ORNL/DCC CRADA," presentation at the CFCC Working Group Meeting, Lake Tahoe, Nev.

Hallee, L. P., Zdonik, S. B., and Green, E. J. 1970. "Manufacturing Ethylene," *Oil and Gas Journal,* **68**, Petroleum Pub. Co., Tulsa, Okla.

Huckins, H. A. 1991. "Apply Advanced Ceramics More Widely in Chemical Processes," *Chemical Engineering Progress,* February, 57–60.

National Petroleum Council 1995. *Summary and Discussion*, a report of the National Petroleum Council, Washington, D.C. (*Research, Development, and Demonstration Needs of the Oil and Gas Industry,* Vol.I).

Owen, H. 1994. "Recent and Future Developments in FCC," Argonne Petroleum Seminar Series, Argonne Natl. Lab., Argonne, Il.

Richlen, S. 1995. "Application of Fiber-Reinforced Ceramic Matrix Composites," in *Handbook on Continuous Fiber-Reinforced Ceramic Matrix Composites,* R. Lehman, S. El-Rahaiby, and J.Wachtman, Jr., eds., CIAC, Purdue University.

Riegel, E. R, and Kent, J. A. 1983. *Riegel's Handbook of Industrial Chemistry,* 8th ed., Van Nostrand Reinhold Company, New York.

Roman, I. C. 1966. "Membranes for Nitrogen Generation—Recent Advances and Impact on other Gas Separations," Seminar on the Ecological Applications of Innovative Membrane Technology in the Chemical Industry, Cetraro, Calabria, Italy.

Scouten, C. G. 1997. "Advanced Ceramics in the Oil-Gas-Petrochemical Industry Sector," presentation at the conference Industrial Applications of Ceramics sponsored by U.S. Advanced Ceramics Association, September 1997.

Sheppard, L. M. 1991. "Corrosion-Resistant Ceramics for Severe Environments," *Ceramic Bull.* **70**(7), 1146–1158.

Sheppard, W. L., Jr. 1988. "Ceramics in Chemical Service," *Chemical Engineering,* October, 59–67.

Technology Vision 2020, The U.S. Chemical Industry 1966. Produced jointly by the American Chemical Society, the American Institute of Chemical Engineers, the Chemical Manufacturing Association, the Council for Chemical Research, and the Synthetic Organic Chemical Manufacturers Association.

Ullmann, F. 1985. *Ullmann's Encyclopedia of Industrial Chemistry,* 5th ed., ed. B. Elvers, S. Hawkins, and G. Schulz, VCH Publishers, New York.

U.S. Department of Energy, Office of Industrial Technologies 1992. Proceedings of the DOE/Advanced Heat Exchangers Program Review, Summary Report DE92014385, February 1992.

Wessel, J. K. 1996. "Breaking Tradition with Ceramic Composites," *Chemical Engineering,* October, 80–82.

Information Supplied by Industry Representatives

Nancy M. Calson, Idaho National Engineering Laboratory

H. Bruce Cranford, DOE/OIT Chemicals Vision Team Lead

Cliff Detts, Chevron Research and Technology Company

Michael R. Gambrell, Dow Chemical Company

John V. Gelsomini, E.I. DuPont de Nemours & Company

Mehmat A. Gencer, B. F. Goodrich

Joseph M. Gondolfe, Stone & Webster Engineering Corporation

Jeffrey A. Hanks, E. I. DuPont de Nemours & Company

Victoria F. Haynes, B. F. Goodrich

William Howell, Dow Chemical Company
Brian L. Jacks, Chevron Research and Technology Company
Ashok K. Jhawar, Amoco Performance Products
Kathleen E. Kain, E. I. DuPont de Nemours & Company
Eugene L. Liening, Dow Chemical Company
Karen Lipuma-Berner, Exxon Research and Engineering Company
Thomas H. Loga, Dresser Industries
Joseph S. Luckett, E. I. DuPont de Nemours & Company
Norman C. Mack, Amoco Performance Products
Jim Mackey, Materials Technology Institute
Urey R. Miller, W. M. Kellogg
T. V. Narayanan, Foster Wheeler Development Corporation
Bruce Nelson, 3M Corporation
John D. Oleson, Dow Corning Corporation
Chandra B. Panchal, Argonne National Laboratory
Richard P. Palluzi, Exxon Research and Engineering Company
Jack Pease, Chevron Research and Technology Company
Dennis A. Perz, Dow Chemical Company
James H. Plonka, Dow Chemical Company
Richard E. Rice, Idaho National Engineering Laboratory
Michael Rio, Dow Chemical Company
John D. Sullivan, Alzeta Corporation
William R. Thomas, Exxon Research and Engineering Company
Tyler B. Thompson, Dow Chemical Company
Daniel E. Wiley, DOE / OIT Refinery Vision Team Lead
John J. Wise, Mobile Technology Company
John J. Worenski, 3M Corporation