Chapter Four

Forest Products Industry

by David W. Richerson

Forest Products is a large industry employing over 1.3 million people, consuming over 3 quads of energy per year (1991 statistics reported by the Energy Information Administration in 1994) and producing around 219,000 tons of waste per year (1989 statistics reported in 1993 by the Environmental Protection Agency). The industry is divided into two segments, wood products and pulp and paper. The pulp and paper segment, which consumes over 80% of the energy and generates over 70% of the pollution, is the major focus of this section.

The forest products industry has formed an effective partnership with the U. S. Department of Energy (DOE) to establish a vision of the future, to identify key technology needs, and to pursue solutions to these needs. *Agenda 2020—A Technology Vision and Research Agenda for America's Forest, Wood, and Paper Industry* formulates the vision. Agenda 2020 also identifies six key strategic research areas: sustainable forest management, environmental performance, energy performance, improved capital effectiveness, recycling, and sensor controls. A subsequent study—conducted between 1992 and 1995 through Oak Ridge National Laboratory (ORNL) and sponsored by the DOE Office of Industrial Technologies Advanced Industrial Materials program—examines each step in papermaking and assesses materials needs. A preliminary report, *Materials Needs and Opportunities in the Pulp and Paper Industry*, was published August 1995. Following are some of the needs that have been identified in DOE technology roadmaps and in the ORNL report.

1. Improved ceramic refractories and hot-gas cleanup components for new gasification systems being developed as an alternative to the present black liquor recovery boiler.
2. Ceramic coatings with improved release characteristics for impulse dryer rolls that are being developed for advanced papermaking machines.
3. Materials with improved corrosion and/or wear resistance for headbox components, press rolls, pumps, chutes, and pipes.
4. Materials/coatings with improved corrosion resistance in the bleach process, especially in peroxide and ClO_2 environments.
5. Corrosion, thermal shock, and impact-resistant ceramics for uncooled water-free smelt spouts in the recovery boiler.
6. Materials with improved abrasion resistance for doctor blades, slitters, drums, and screen baskets in the papermaking machine.
7. On-line sensors to measure moisture content, thickness, stiffness, web and paper quality, and fiber properties and orientation.
8. Improved processes for gas, solid, and liquid separations, possibly using porous ceramic membranes.
9. Higher modulus (stiffer) material for dryer rolls.
10. Materials with improved lubricity between the pressure shoe and roll in the papermaking machine.
11. Blow plate materials with improved wear and corrosion resistance.
12. Improved ceramics for rotating grindstones for mechanical pulping.
13. Lighter weight, wear-resistant materials for mechanical refiner rotating disks.
14. Sulfidation-resistant materials/coatings for superheater and reheater tubes and for scrubber and gas turbine components.

Figure 4.1 identifies key activities involved in converting harvested trees into paper. The trees are delivered to a woodyard where they are cut to workable lengths, debarked, and then either delivered to a "groundwood" mechanical pulping operation or chopped into small chips for mechanical refining or chemical processing into pulp. Next the pulp is treated to separate the lignins (the glue that binds wood fibers together) and process chemicals and then it is bleached. The cleaned, bleached pulp then enters the paper machine and exits as dry rolls of paper. Large

amounts of energy, water, and chemicals are required in the various stages of the pulp and paper process, so extensive effort in the industry has been directed at recycling and use of non-pulp-grade wood fractions to supply process heat and generate electricity.

Figure 4.2 illustrates how all of these process requirements are tied together in a modern paper mill. A modern mill can process 1500 tons of paper per day. Agenda 2020 reports that there are 547 mills in 42 states that each year produce about 82 million tons of paper and paperboard and 10million tons of market pulp. Handling such large levels of throughput are major challenges of logistics, capital equipment, and materials.

The following sections describe each step in pulp and paper processing, identify some current ceramic applications, review some developments in progress, and speculate on some potential ceramic applications.

4.1 WOODYARD

As illustrated in Fig. 4.3, the functions of the woodyard are to cut logs to workable lengths, to remove the bark from logs, and to chop the debarked logs into chips about 2.5 cm (1 in.) across. The raw logs first pass sideways through a series of circular saws to be cut to shorter lengths. The saws are 1.8–3.0 m (6–10 ft) in diameter, and their blades are tipped with tungsten carbide–cobalt (WC-Co) cermet cutting edges. The logs then enter a slotted debarking drum. This is rotated so that the logs rub against each other to remove the bark. The debarked logs move by conveyor to the chipper, which consists of a heavy disk rotating at about 1800 rpm. The disk contains 4–16 rotating knives and other stationary knives and can convert a log 1.5 m (5 ft) long and 30.4cm (12 in.) in diameter into chips in 2–3 s. Metal stationary blades (called bed plates) typically survive about five days. Metal matrix composite bed plates containing titanium carbide ceramic reinforcement have survived 36 days.

The chips are then conveyed to screens and sorted for size. Some conveyors are belt driven, others are pneumatic. Aluminum oxide (alumina) tiles and blocks have been successfully used on screens, on elbows of pneumatic conveyor pipe, in sawdust and chip separation cyclones, and as trough linings. New tougher ceramics such as silicon nitride, transformation-toughened zirconia, and transformation-toughened alumina could provide increased impact resistance and wear resistance but are currently more expensive than alumina. However, they have been successfully substituted for cheaper materials in some other applications (including the paper machine) and have provided a substantial life cycle benefit, so are worth consideration. Ceramic bearings and sleeves for conveyor systems are also worth considering, especially silicon nitride. The price of silicon nitride bearings is coming down rapidly.

4.2 PULP PREPARATION

Paper consists of primarily the long cellulose fibers from wood. These fibers are bonded together in the wood by compounds called lignins and are liberated from the wood by either a mechanical or chemical pulp process. The predominant pulp process is the kraft chemical process, but the mechanical processes are discussed here first. Mechanical processes can be categorized as (1) groundwood and (2) disk refining.

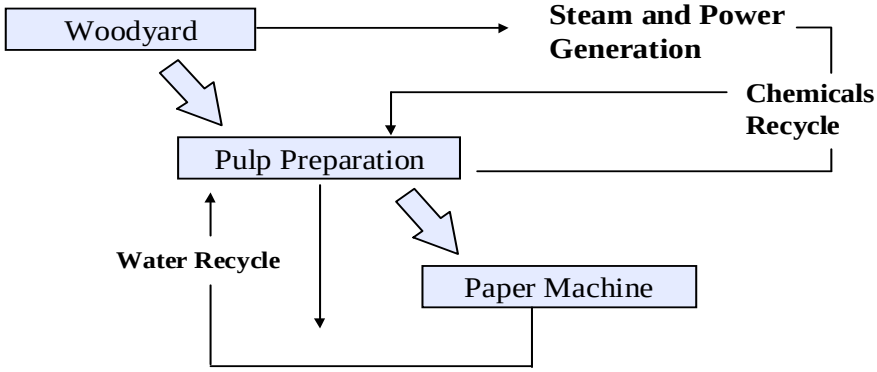

Fig. 4.1. Key elements of the forest products industry pulp and paper segment.

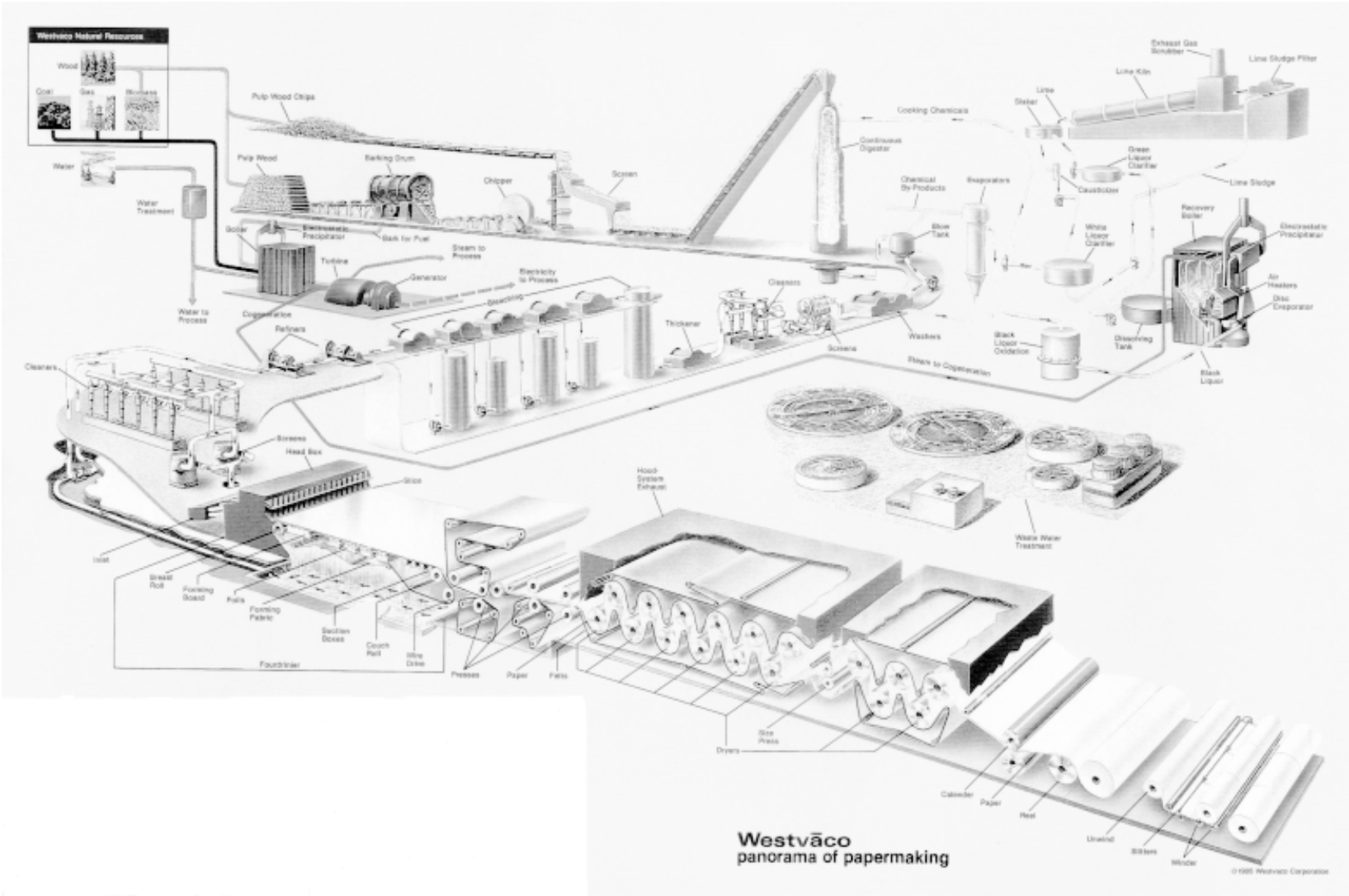

Fig. 4.2. Schematic illustrating a modern paper mill using the kraft chemical pulping process. The schematic drawings are not to scale. To provide some idea of size, the digester can be 76 m (250 ft) high and the paper machine 6–12 m (20–40 ft) wide. The "panorama of papermaking" schematic is reprinted with the permission of Westvaco Corporation, New York, N.Y.

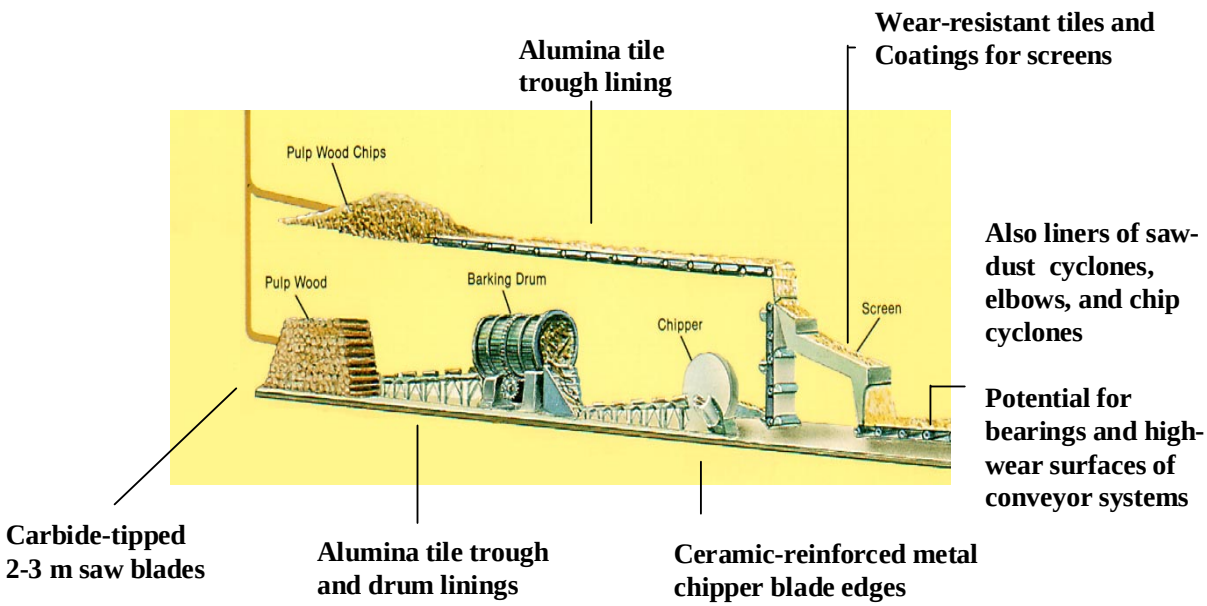

Fig. 4.3. Current and potential applications of ceramic-based materials in the woodyard. *Source*: Detail from "panaroma of papermaking" schematic in Fig. 4.2.

Mechanical Pulping

The groundwood machine is illustrated in Fig.4.4. Logs ar e pressed against a rotating cylinder of stone or ceramic called the grindstone. A water spray prevents overheating and mixes with the fibers to form a pulp slurry. Some groundwood operations are conducted at elevated temperature and others with a chemical pretreatment. Issues with groundwood processes include control of quality of pulp (yield of fibers of optimum length) and reliability/life of equipment. Engineered ceramics have the potential to allow optimization of the grindstone surface and to minimize changes in the surface due to wear, thus increasing consistency and decreasing maintenance. However, the grindstone is very large, so a key challenge is engineering a reliable attachment of the ceramics to the grindstone cylinder. Another potential application for ceramics is as bearing components.

A disk refiner is illustrated in Fig. 4.5. It is essentially a large attrition mill with either two closely-spaced plates rotating in opposite directions or one plate rotating adjacent to a stationary plate. The disks are surfaced with corrugations or

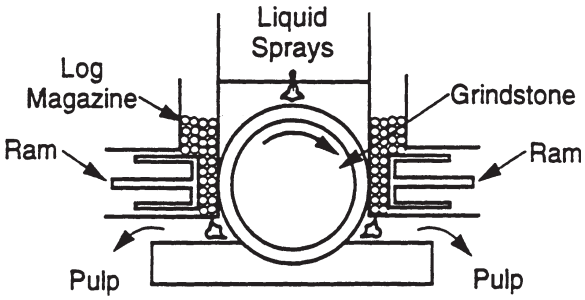

Fig. 4.4. Schematic of a typical groundwood machine. *Source:* ORNL drawing 93M-5103, adapted from H. E. Boyer and T. L. Gall, *Metals Handbook*, ed. H. E. Boyer, T. L. Gall, American Society for Metals, Metals Park, Ohio, 1984.

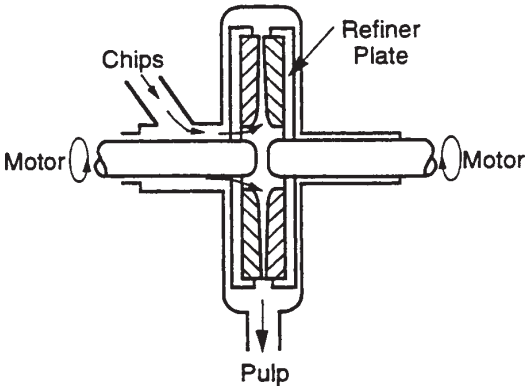

Fig. 4.5. Schematic of a disk refiner machine for mechanical pulping. *Source*: ORNL drawing 93M-5104, adapted from H. E. Boyer and T. L. Gall, *Metals Handbook*, ed. H. E. Boyer, T. L. Gall, American Society for Metals, Metals Park, Ohio, 1984.

bars typically 3 mm × 6mm × 25 cm that are closely spaced near the outside diameter (OD) and more widely spaced at the inside diameter (ID). Wood chips (plus water) are introduced at the ID and are shredded as they move to the OD. The disks are driven by 30,000–40,000 hp electric motors and rotate at about 1800 rpm. The gap between the plates is 0.5–1.2 mm.

Most refiner plates are white cast iron or cast stainless steel. Wear and corrosion limit the life of the refiner plates. The corrosion results from sulfur-bearing acids and chlorides derived from pretreatment of the chips with steam. WC-Co cermet refiner plates have been considered, but have higher specific gravity (are substantially heavier) than current plates and would substantially increase the rotational stresses. Furthermore, the desire of the industry is to go to higher speeds. Ceramics, which have lower specific gravity and superior wear resistance, could operate at higher speed and provide improved wear life. However, there is concern about whether the ceramics have high enough fracture toughness to be reliable and whether they can be fabricated to the required size or attached as bars. Another concern is that disks sometimes have inadequate clearance and come into contact during rotation. Metals are damaged, but do not fail catastrophically. Transformation-toughened ceramics, silicon nitride, and metal-ceramic composites appear to have the best potential for this application.

Chemical Pulping

Chemical pulping relies on a combination of heat, pressure, and chemicals to dissolve the lignin and release the fibers. The two major chemical processes are the kraft process and the sulfite process. The kraft process integrated into a modern mill is illustrated in Fig. 4.2. The pulping steps of the process are illustrated in Fig. 4.6. The wood chips are conveyed into a "digester" and mixed with water and chemicals. The key chemicals for the kraft process are sodium sulfide and sodium hydroxide. The digester is essentially a pressure cooker that operates up to 170° C (340° F) at pressures between 0.7 and 1.3 MPa (100–180 psi). Some digesters are continuous, and others are batch. A continuous digester can range in height from 15 to 76 m (50 to 250 ft). Batch digesters are typically 3.3–4.0 m (11–13 ft) in diameter and 12–15 m (40–50 ft) in height. The typical dwell time of the chips in the digester is 1–2 h.

At the completion of digestion, the high-pressure mixture of the wood chips and the solution containing the dissolved lignin passes through a pipe (blowline) and enters tangentially into an atmospheric pressure tank (called the "blow tank") and impacts against a region of the tank called the target plate. The combination of the rapid pressure change and the impact explodes the chips into individual fibers. The pulp, which at this point in

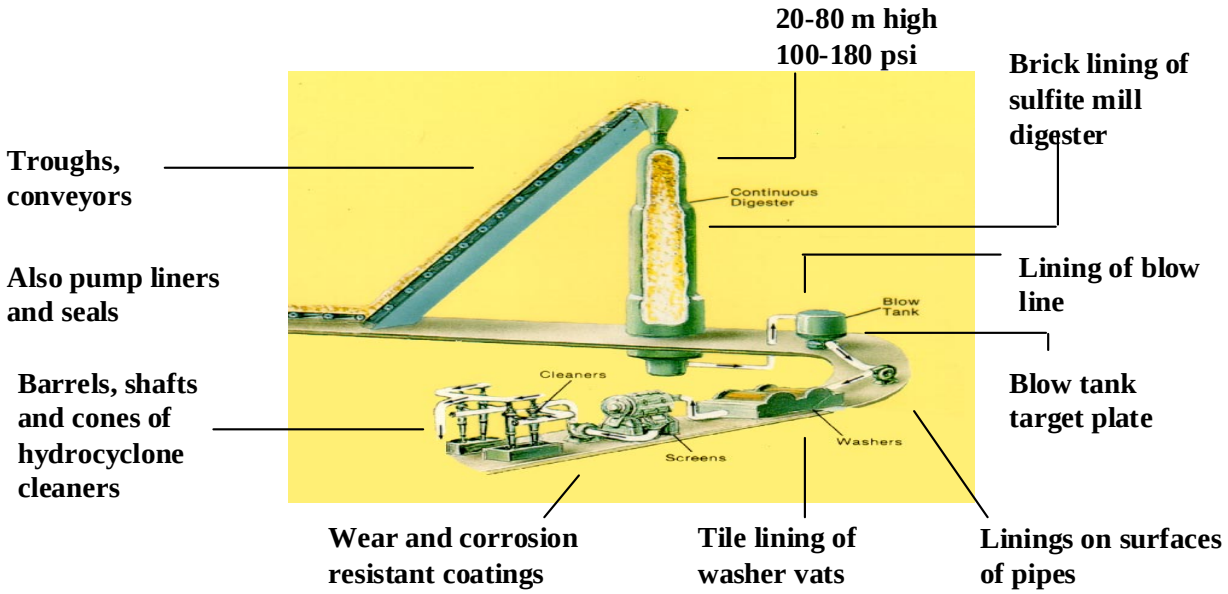

Fig. 4.6. Current and potential uses of ceramics in pulp digestion. ***S****ource:* Detail from "panaroma of papermaking" schematic in Fig. 4.2.

the process is referred to as "brownstock," is discharged from the bottom of the blow tank by large rotary rake arms and proceeds to a sequence of equipment that separates the fibers from the chemicals and dissolved lignin. Gases resulting from the chemical reactions in the digester exit the top of the blow tank. These consist of mercaptans, dimethyl sulfides, and other gases that give paper mills their distinctive smell. The gases enter a tank called a "blowheat accumulator," where they are washed with cascading water. Some of the gases are condensed to a liquid, from which turpentine and other by-products are extracted. Gases that cannot be condensed are burned as a fuel supplement in the recovery boiler, the lime kiln, or the hog fuel boiler to generate steam.

The brownstock is conveyed through pipes to a series of vibrating screens called "knotters." The knotters separate acceptable pulp from bark fragments and inadequately cooked chips. The bark fragments and chips generally become fuel for the hog boiler or go to landfill. The usable brownstock passes through a series of cleaners to separate the wood fibers from the chemicals and lignin. These cleaners are typically counter-current vacuum drum washers that consist of a washer vat, a rotary drum, and a discharge doctor blade. Counter-current means that the pulp flows in one direction and the water in the other, an arrangement that conserves water and allows some concentration of the chemicals and lignin into "black liquor." The black liquor flows to the recovery boiler for chemicals recycling and combustion of the lignin. These processes are discussed later.

The brownstock typically goes through three to five washing stages. Each stage has a washer vat, a drum filter, a repulper, and a steam mixer. The repulper breaks up filtercake. The steam mixer adds heat and water to the filtered pulp to prepare a pulp slurry suitable for pumping to the next washing / filtering stage.

Ceramic materials are currently used in the pulping stage of various paper mills. The major application is chemically resistant masonry consisting of tile-lined concrete for washer vats and pulp storage tanks. Some sulfite mills have brick-lined digesters. Ceramics (typically alumina) are also used for various wear- and corrosion-resistant parts such as pump components, seals, valves, and elbows of pipes. Additional components susceptible to wear and corrosion could benefit from ceramics or ceramic coatings. Examples include the blow tank target plate, inlets for steam and chemicals to the digester, liner for the blow discharge nozzle of the digester, doctor blade edges for the drum washers, wear surfaces for the blow tank discharge rake, and additional pump components. Components currently utilizing ceramics might benefit from upgrading to newer, tougher ceramics

4.3 BLEACHING

To obtain white paper requires bleaching. Bleaching of the brownstock involves a series of steps, as illustrated in Fig. 4.7, that vary according to the type of wood and the end-use of the pulp.

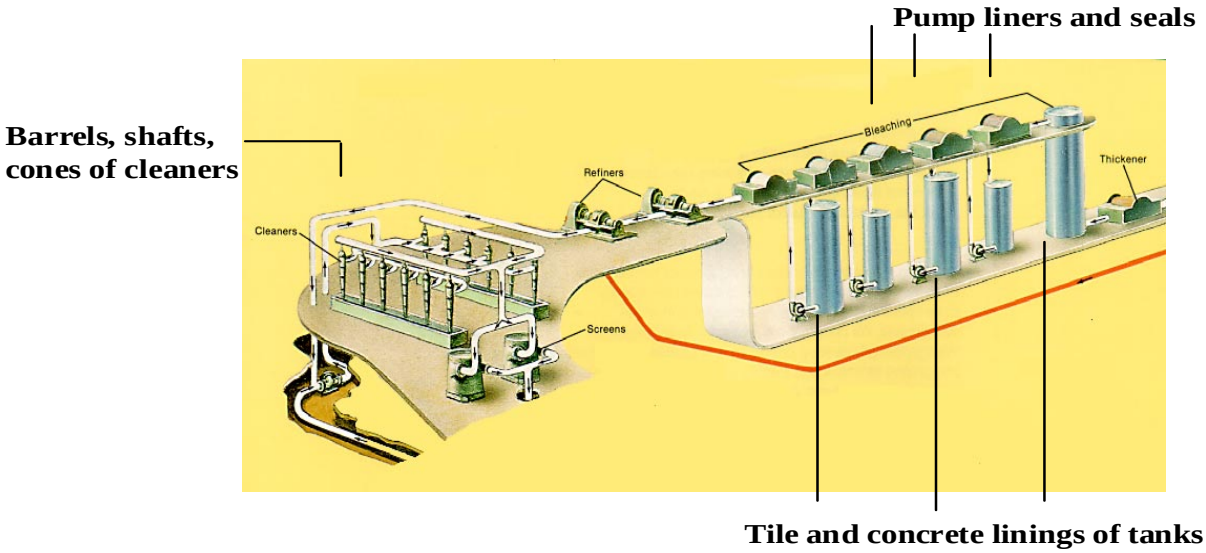

Fig. 4.7. Current and potential uses of ceramics in bleaching. *Source:* Detail from "panaroma of papermaking" schematic in Fig. 4.2.

Some bleaching processes only alter the color; others extract residual lignin. Each bleaching stage entails a tower and a washer. The washer vats are similar to those for brownstock preparation. The towers are typically carbon steel lined with ceramic tiles or fiberglass-reinforced plastic. Austenitic stainless steels and titanium alloys are also used in bleaching equipment.

The bleaching sequence typically starts with a strong oxidant. Previously the oxidant was chlorine, but environmental concerns have led to reduction in use of chlorine and substitutions of oxygen and chlorine dioxide. Sustained contact of chlorine with pulp can also degrade the fibers, so chlorine bleaching is followed with a sodium hydroxide caustic treatment to extract the chlorine. This treatment results in large swings in pH from stage to stage, placing different demands on materials for liners, pumps, valves, and pipes for the different stages. A sodium or calcium hypochlorite bleaching stage previously followed the caustic extraction stage, but this type of bleaching also resulted in adverse emissions (chloroform). Peroxide is an alternative. The final bleaching stage is typically one or two cycles of chlorine dioxide, which results in bright white pulp referred to as "stock."

Materials for traditional chlorine bleaching equipment were relatively well understood and optimized for the chemicals used. Changes to chlorine dioxide, peroxide, and superoxygenated bleaching compounds have modified the chemical conditions, so a new optimization of materials is likely to be necessary. Ceramic tiles or coatings may provide longer life than traditional liner materials, but studies are necessary for assessment.

The bleached stock is still not ready for entering the paper machine. Bleached stock is diluted from about 10% solids to around 3% solids and pumped to refiners which beat or chop the pulp fibers to the desired length and frayed shape. The refined pulp then passes through a series of hydrocyclone cleaners. The inlet barrel, upper cone, and lower cone of each hydrocyclone is typically lined with high-alumina ceramic, as illustrated in Fig.4.8. The r efined, cleaned pulp, which contains about 0.5% fiber and is referred to as "furnish," is ready to enter the paper machine.

Ceramics can also provide benefits as wear parts in pumps, mechanical seals, pipes, valves, hydrocyclones, and refiners. They may also be candidates for corrosion resistance in the bleaching stages if metals and fiberglass-reinforced plastics exhibit difficulties with new bleach chemistries.

Fig. 4.8. Alumina ceramic liners for hydrocyclone cleaners. *Source:* Wilbanks, a Coors Ceramics Company, Hillsboro, Oregon.

4.4P APER MACHINE

This complex machine contains a capital-intensive assembly of hundreds of metallic, polymeric and ceramic parts that must function within a tight operating window to transform dilute pulp in about 30 s into finished paper. Depending on the type of paper product being produced, the paper machine operates at 600–2128m / min (1950–7000 ft / min). Shutdown for maintenance or readjustment is very expensive, so the pulp and paper industry has aggressively evaluated new materials that can minimize shutdown. This evaluation has led to extensive use of advanced ceramics and continuing efforts to upgrade to longer life ceramics (or alternate materials) as they become available.

Figure 4.9 illustrates a typical paper machine and lists some of the current and potential ceramics applications. Although paper machines differ depending on the end product (e.g., writing paper, tissue paper, or paperboard), a typical machine has four functional sections: the fourdrinier, the press section, the drying section, and the coating section.

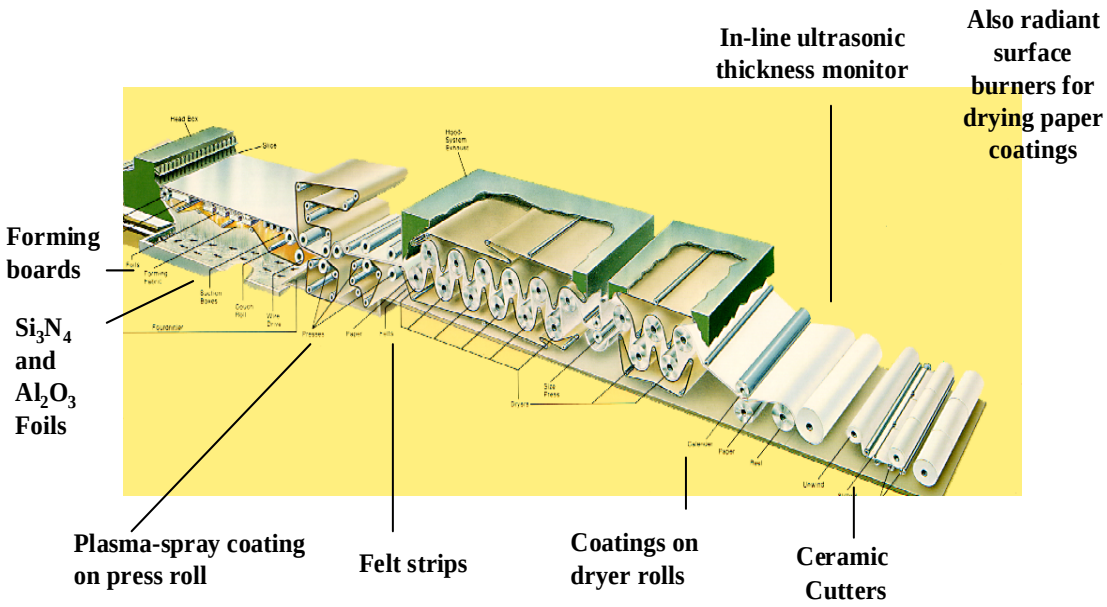

Fig. 4.9. Current and potential uses of ceramics in the paper machine. *Source:* Detail from "panaroma of papermaking" schematic in Fig. 4.2.

Forming and Pressing Sections

Figure 4.10 shows a simple schematic of the forming and first press station. The purpose of the forming section is to spread pulp slurry into a uniform thickness flow and remove enough water so the pulp sheet will hold together as it enters the press section. Pulp containing 0.5% fiber is pumped from the storage container through distributor pipes into a box or compartment called the "headbox," which extends the whole width of the paper machine (6–12 m). The headbox, which is pressurized, forces a flow of pulp slurry through a slit called the "slice." The slit edge of the slice is adjustable to meter the thickness of flow and thus define the ultimate thickness of the paper product. The pump components, the distribution pipes (especially entrances, elbows, and exits), and the slit edge are all susceptible to wear and corrosion and are candidates for improved durability.

The metered thickness of pulp slurry flows onto a fabric mesh or screen called the "wire." The mesh is made typically of woven nylon or polyester and has about 95 holes / lin cm (240 holes / lin in.). The wire is driven by rolls at 600–2128 m / min (1950–7000 ft / min) and passes over a "forming board," a series of spaced slats called "foils," and plates called "suction box covers," which contain holes or slots (see examples in Figs.4.1 1 and 4.12). Water is extracted between the foils and through the holes / slots in the suction box covers, with the wire acting as a porous carrier to support the pulp. The surfaces of the forming board, foils, and covers must be very smooth to avoid damage to the polymer wire and must also be very resistant to wear. Aluminum oxide ceramics have been used successfully for many years (since about 1962) and in some cases have recently been upgraded to tougher ceramics such as silicon nitride. Silicon carbide also has been used for suction box covers and polyethylene for foils.

Other components in the forming section must have smooth, wear-resistant surfaces, especially to guide and support the wire between rolls. Additional potential applications for ceramics include bearings, sleeves, and possibly even wear-resistant coatings on rolls.

After passing the suction boxes, the pulp sheet ("web") still contains about 80% water. The web passes over a suction roll called the "couch roll" and moves off the wire and onto the "felt." The felt is thicker and sturdier than the wire and is usually made of needle-punched nonwoven nylon. The felt carries the web typically over another suction roll and to the first press roll. The suction rolls draw water out of the web by vacuum and are one of the most expensive capital items in the paper machine. They cost about $1 million each. They are currently made of a hardenable stainless steel and can fail from fatigue cracking

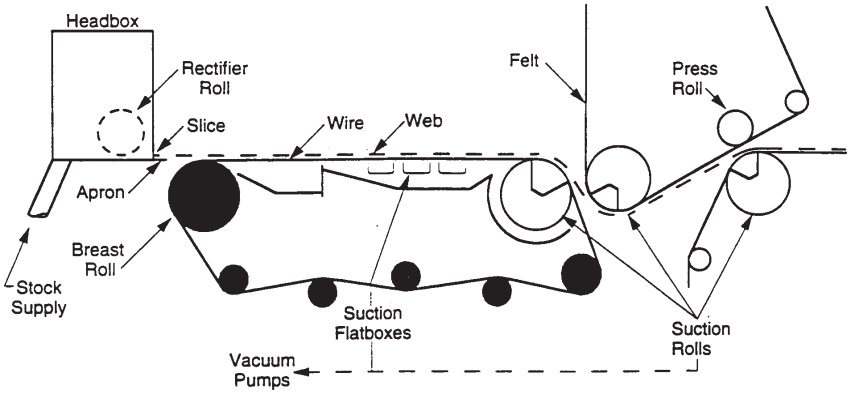

Fig. 4.10. Schematic showing some of the components in the fourdrinier and first press section of a paper machine. *Source:* ORNL drawing 93M-5102, adapted from H. E. Boyer and T. L. Gall, *Metals Handbook*, ed. H. E. Boyer, T. L. Gall, American Society for Metals, Metals Park, Ohio, 1984.

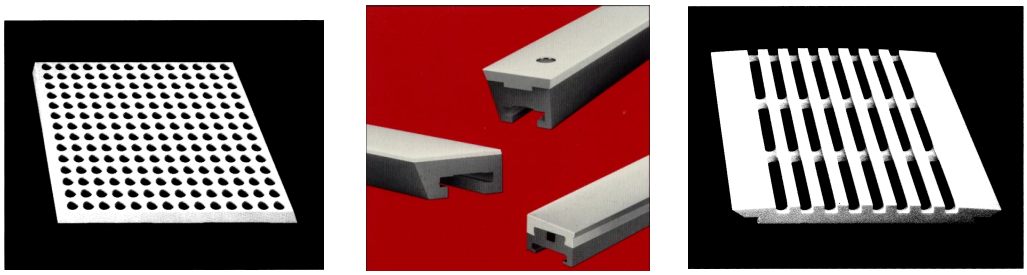

Fig. 4.11. Ceramic foil and suction box cover segments. *Source:* Wilbanks (A Coors Ceramics Company), Hillsboro, Oregon.

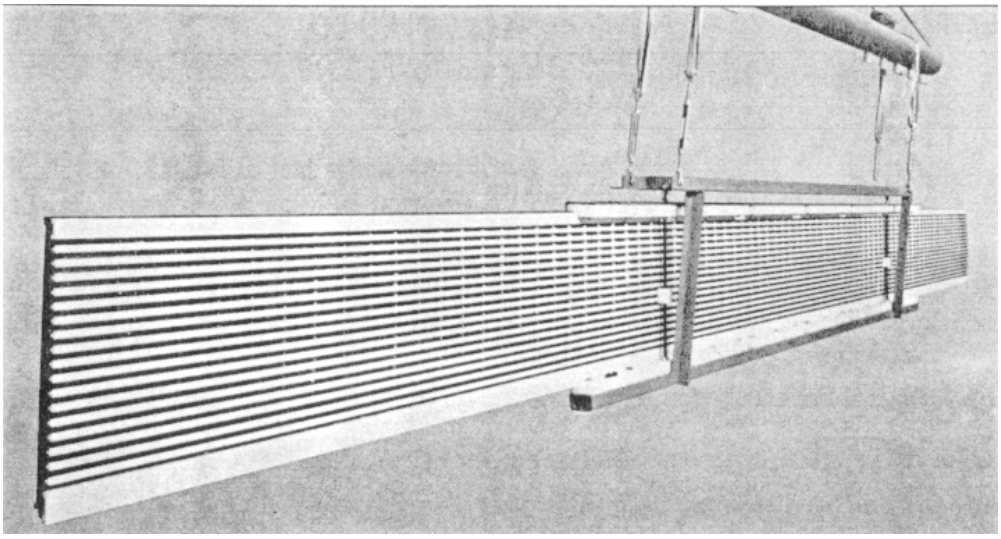

Fig. 4.12. Assembled Wilbanks ceramic suction box cover segment ready for installation into a paper machine. *Source: American Papermaker*, October 1989.

and corrosion. Better materials are needed, but ceramics do not appear to be a viable option, unless a ceramic coating might provide corrosion resistance.

The objective of the press section is to compact the web and squeeze out additional water. Two types of press rolls were traditionally used, one made of stainless steel coated with hard rubber and the other made of granite rock. The granite roll was up to 12 m (40 ft) long and 1.5m (5 ft) in diameter. Granite is a type of igneous rock made up of grains of quartz, mica, and feldspar. The granite rolls were quarried, surface ground, and polished. Occasionally a granite press roll failed with catastrophic consequences. Moat granite rolls have been replaced with metal rolls coated with ceramic. Ceramic coatings can crack and spall, but this does not result in a catastrophic roll failure. There is a continuing need to improve the durability and life of the ceramic coatings.

Drying Section

The compacted pulp sheet leave the press section and enters the drying section. Drying is achieved with a series of heated rolls. Thicker products such as linerboard may require over 120 dryer rolls, whereas thinner products such as newspaper may require only 80. The drying operation consumes about one-fourth of the total energy required for current pulp and paper mills, so represents an important area for energy efficiency improvements. Current technology involves hollow cylindrical dryer rolls of cast iron heated with steam. An alternate technology called *impulse drying*, which used higher temperature (about 260ºC) to achieve faster and more efficient drying, was evaluated starting in the 1980s. This process was very promising but had problems with the paper sticking to the surface of the roll at the higher temperature. This impulse drying technology has been evolving. Sandia National Laboratory developed a plasma-sprayed ziconia ceramic coating that demonstrated improved release properties plus substantial energy reduction (667kJ/kg compar ed to 2260 kJ/kg with an uncoated steel roll), but still didn't have reliable enough release properties to proceed to commercial use. Within the past year, further improvements have been made in impulse drying and the release properties of sufrace coatings to justify initial commercial evaluation, but there is still a need for improvements in coatings. Continued development with ceramic coatings and mixed composition coatings should lead to a reliable system. Ceramic-coated convential steam rolls already have demonstrated benefits in the manufacture of fragile tissue. In this case, the ceramic coating was overcoated with a layer of Teflon.

Following the first drying section, the paper is flooded with a starch solution which is forced into the paper by another press station (size press). The starch provides enhanced strength. Further drying stations then finish the drying process.

Many grades of paper are coated with a mixture of clay, latex, and whitening agents after drying. The coating is applied as a thin slurry by a calendar roll or doctor blade and is rapidly dried by heaters above the paper. Ceramic matrix composite radiant surface burners (Fig. 4.13), developed under the DOE CFCC Program, are a potential viable alternative as a high efficiency minimal emissions (especially NO_x) heater.

The final step in the paper machine is to cut the paper to the desired width and wind the paper onto storage/shipping spools. The best cutters (slitters) are currently made of transformation-toughened zirconia ceramic and WC-Co cermet.

Another need for the paper machine is for improved on-line measurement of the quality and thickness of the paper. Off-line testing causes a time delay that can result in production of substantial quantity of reject paper before a problem is detected. This reject paper must be repulped and refabricated into paper. The industry estimates that up to 5% of paper production must be reprocessed, resulting in a loss of about $190,000 for each percent per year for a 1000-ton/d mill. Piezoelectric ceramic ultrasonic transducers are

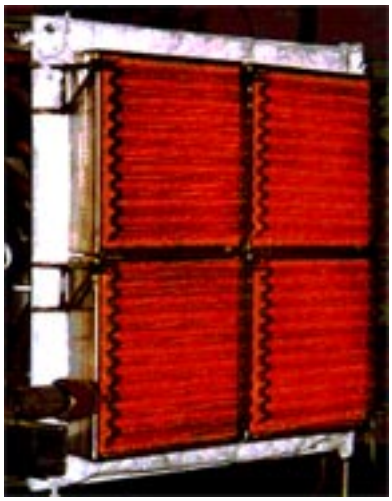

Fig. 4.13. Ceramic matrix composite radiant burner heat source with potential for paper coating drying. *Source:* AlliedSignal Composites, Inc., Newark, Del.

being evaluated for potential as computer-monitored on-line sensors. One array of piezoelectric transducers would be on one side of the paper and an adjacent array on the other side. The first transducers would send ultrasonic vibrations through the paper to be received by the second array of transducers. The pairs would continuously monitor the velocity of the ultrasonic sound waves through the paper and also monitor for major defects such as voids and tears. Velocity variations correlate with variations in thickness, stiffness and density and are anticipated to provide an instantaneous assessment of the condition/quality of the paper.

4.5 CHEMICALS, WATER, AND ENERGY RECYCLING

The long-range goal of the forest products industry is to establish a closed-loop pulp and paper mill that efficiently reuses nearly 100% of the chemicals and water and produces most of its own energy requirements from biomass waste, process off-gases, and burning of lignin. Excellent progress has already been achieved. Water use per ton of paper has decreased over 70% during the past 20 years. Energy self-sufficiency increased from 36% in 1972 to about 57% in 1993.

Key steps in chemicals recovery/recycling in a current kraft process paper mill are illustrated in Fig. 4.14, along with a listing of some areas where ceramics presently or potentially can provide benefits. The black liquor resulting from washing the lignin and chemicals out of the pulp is pumped from storage tanks to an evaporator to increase the solids content from about 15% to 50–52%. The typical evaporator is a "multiple-effect, vertical, thin-film" unit which is roughly 9–15 m (30–50 ft) high and 1.8–3.0 m (6–10ft) in diameter. Steam is used in a heat exchanger array to initiate evaporation. The output from the evaporator, called "heavy black liquor," is pumped into a tank and vigorously mixed with air to oxidize the sodium sulfide to sodium thiosulfate. This decreases emissions during later burning of the black liquor in the recovery boiler.

Recovery Boiler

Fifty-two percent solids is still too low for safe burning in the recovery boiler. Dust from the boiler electrostatic precipitator is mixed with the black liquor, and further moisture reduction is then achieved with direct-contact evaporators. Two types of evaporators are commonly in use: (1) the cascade evaporator consisting of a rotating wheel with large diameter tubes that alternately pass through the black liquor and the hot flue gas stream; and (2) the cyclone evaporator in which black liquor is sprayed into the flue gas stream. The contact evaporators increase the solids content to 68–72%. This black liquor is then pumped to "liquor guns" and sprayed into the recovery boiler firebox where the remaining water evaporates, the lignin burns, and the chemicals drop to the floor of the boiler to form a molten salt "smelt" bed.

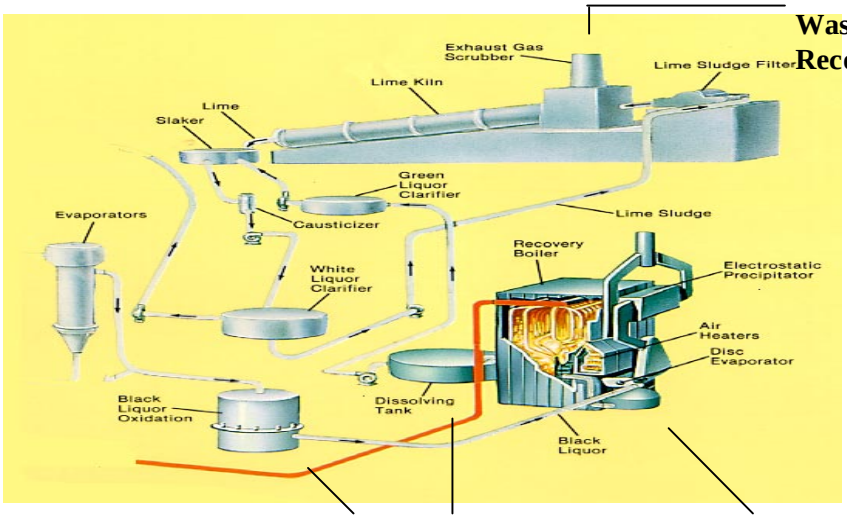

Hot gas cleanup
Waste heat
Recovery

Also pump wear plates and seal faces

Also acid brick lined trench sewers

Also porous membranes for waste-water treatment

Tank linings

Refractories in recovery boiler

Fig. 4.14. Current and potential uses of ceramics in chemicals recycling. *Source:* Detail from "panaroma of papermaking" schematic in Fig. 4.2.

The walls and floor of the boiler are metallic and constructed primarily of tubes about 5-cm (2-in.) in diameter. Water is pumped into the tubes to keep the metal cool, below about 427°C (800°F), and to extract heat for generation of steam and electricity. Other free-standing tubes hang in the gas stream at the flue gas exit at the top of the boiler to extract more heat for process steam and electricity. Typically there are three banks of these tubes: superheater tubes, boiler tubes, and economizer tubes. The gas stream then passes through electrostatic precipitators to remove dust particles.

The recovery boiler poses numerous materials challenges from the high temperature, the presence of corrosive molten salts, and the erosive dust particles. Temperatures are controlled by the quantity and rate of water and steam flow to allow a layer of molten salt to solidify on the surface of the metals to provide protection and insulation. This layer increases the life of the metals but reduces the efficiency. Ceramic refractories were once used in boiler construction, but the metals in the current Tomlinson boiler design have proved over the years to be superior and require less maintenance. Advanced ceramics are not likely to provide a benefit in the present boiler design, unless ceramic coatings are defined that can reduce corrosion or permit boiler operation under increased efficiency conditions.

Alternative Black Liquor Recovery

Alternate technologies are being considered as potential replacements for the recovery boiler. One that appears promising is black liquor gasification. Rather than completely burning the combustible material in the black liquor, as is done in the current kraft recovery boiler, only 40–50% is burned in the gasification process. The remaining combustible material is isolated as a clean combustible gas suitable for fueling a gas turbine or even a fuel cell. This technology makes possible a more efficient combined-cycle process wherein the turbine can operate at high temperatures as a topping cycle to produce electrical power and heat from black liquor burning, while the heat from the gases exiting the turbine can produce superheated steam. The combined cycle efficiency can exceed 35% compared to the 10–15% efficiency of the current simple-cycle Tomlinson boiler.

A black liquor gasification technology and plant sized for 75 metric tons of dry solids per day was demonstrated in Sweden by Chemrec AB in 1991. Shortly thereafter, a gasifier sized at 330metric tons of dry solids per day was installed at a Weyerhaeuser paper mill at New Bern, N.C., and began operations in December 1996. These are first-generation technology plants that are operating at atmospheric pressure and relatively low temperatures. The experience with these plants will lead to pressurized systems integrated with gas turbines into high-efficiency combined-cycle plants. For example, Chemric has partnered with Air Products to develop a “pressurized oxygen-blown entrained-flow quench gasifier” that is currently undergoing pilot-scale testing processing 3–10 tons/d of black liquor solids. A commercial-scale demonstration of 550 metric tons/d is planned for 2002. The biggest challenge appears to be the ceramic refractories lining the gasifier chamber. Highly corrosive molten sodium sulfide deposits on the refractories. Other components in the system that need to be addressed are heat exchanger tubes and hot-gas filters.

Another emerging technology is a “pulse combustion gasifier” under development by Manufacturing & Technology Conversion International (MTCI)/ThermoChem. The black liquor is pyrolyzed and reacted with steam to yield a fuel gas plus solid particles of the salts rather than molten smelt. The reactions are achieved in a low-velocity fluidized bed, so temperature can be minimized and the gas-solid separations easily performed. Bed temperature does not exceed 620°C (1150°F). Both alumina-based refractories and stainless steel have been successfully demonstrated as linings for the fluidized bed, and stainless steel tubes appear to be working well in the in-bed heat exchanger. The low temperature of operation minimizes NO_x formation and other gaseous pollutants. Another potential advantage of this gasifier process is the relative cleanliness of the inorganic salts. It appears that simple physical filtration can remove carbonaceous impurities and thus completely eliminate the clarification step required for smelt processing. Besides the fluidized bed vessel lining and possible coatings on the heat exchanger tubes, the potential ceramic applications are for hot-gas filters and gas turbine engine components.

Chemicals Recovery from Smelt

The molten smelt which accumulates on the floor of the recovery boiler is tapped through the smelt spouts. As it exits the spouts, it is blasted with steam or air jets. These break up the stream into small droplets that react and produce thousands of miniature explosions. The shattered par-

ticles of smelt drop into a tank of water where the sodium salts dissolve to form a liquid referred to as "green liquor." The green liquor is pumped into tanks where insoluble particles ("dregs") settle. The dregs are tapped from the bottom of the tanks and discarded as landfill.

The clarified green liquor is pumped to the "slaker." Calcium oxide (quicklime) is added to the slaker and allowed to settle slowly through the green liquor. Additional insoluble material is removed and used as landfill. The green liquor and lime are transferred to another tank (causticizer) and agitated to complete the reaction of the lime and the sodium compounds, resulting in primarily calcium carbonate particles suspended in sodium hydroxide solution. This suspension is pumped to other tanks where the calcium carbonate "green lime mud" settles. The remaining fluid ("white liquor") is pumped to storage or directly to the digester to repeat the pulp cycle.

Potential ceramic applications are for pump parts, valves, seals, agitator components, selected liners, and possibly coating of the slaker discharge screw.

The green lime mud is washed and settled and pumped to filters where it is concentrated to 60–70% solids. The more concentrated mud is conveyed by a screw conveyor into a rotary lime kiln, which first removes the residual moisture and then decomposes the calcium carbonate to calcium oxide. The lime kiln is 22.5–106m (75–350ft) long by 2.4–4.6 m (8–15 ft) in diameter and consists of a steel shell lined with a ceramic refractory lining. The lime kiln is tilted such that lime mud enters at the slightly higher end and works its way by gravity and rotation slowly to the lower end. A single oil or gas burner is mounted at the lower end, resulting in a temperature gradient from hottest at the dry end to coolest at the wet end. Moisture is evaporated towards the wet end. Further down the kiln, the lime mud becomes dry and the temperature exceeds the 841°C (1546°F) necessary to dissociate the calcium carbonate. Peak temperature can reach 982–1371°C (1800–2500°F). The lining of the lime kiln is typically a combination of fire brick and castable compositions that are well established.

Power Generation

A large integrated paper mill consumes substantial power. For example, a 1500 ton / d mill requires as much power as a city of 40,000 people. Part of the electrical power required is generated at the mill using waste heat from the recovery boiler and from burning bark, scrap wood, coal, or other fuels in the mill power plant. Ceramics can provide benefits as wear-resistant components in fuel-handling equipment, as temperature- and corrosion-resistant components, and in particulate removal in hot flue gases.

Water Treatment and Recycling

A 1500-ton / d mill previously required around 65 million gal / d of water to perform all of the tasks discussed in prior sections. Efforts to achieve closed-loop cycling ("mill closure"") are already in progress and are identifying significant challenges in water recycling. One of the major problems is buildup of impurities and salts in the water that can affect the quality of product and can cause corrosion to mill materials. Processes need to be established that can filter out or otherwise remove these impurities. One option being considered is porous ceramic membrane technology which utilizes controlled pores that allow the water to pass through but stops specific impurities or chemicals.

4.6 SUMMARY OF POTENTIAL APPLICATIONS OF CERAMIC-BASED MATERIALS IN THE FOREST PRODUCTS INDUSTRY

The forest products industry is capital-intensive; equipment is expensive to procure and to maintain. The industry has been very aggressive at seeking materials solutions to achieving longer life equipment with decreased maintenance. This effort has included considerable evaluation and use of ceramic-based materials. New generations of ceramic-based materials with improved toughness, wear resistance, corrosion resistance, and reliability are establishing themselves in commercial products. These include the transformation-toughened oxide ceramics, silicon nitride, silicon carbide, ceramic-reinforced metals, ceramic matrix composites, refined thermal barrier coatings, and new diamond-like coatings. These ceramic materials have the potential to help the forest products industry meet their goals as outlined in *Agenda 2020*. Table 4.1 summarizes pulp and paper mill applications that can benefit from the new-generation ceramic-based materials.

Table 4.1. Opportunities for ceramic-based materials in the modern paper mill

Application	Industry needs	Opportunities for ceramics
Wear surfaces	Chutes, pipes (especially elbows), blow plate target, pulp refiner parts, discharge rakes or screws, screens, doctor blades, slice edges, and other paper machine parts	Incremental upgrades with tougher, improved wear resistance ceramics; ceramic matrix composites; advanced coatings
Cutter edges	Decreased wear and longer life for saw blades, chipper blades, mechanical refiner disks, slitters	Improved-toughness monolithic ceramics such as transformation-toughened zirconia; ceramic-reinforced metals; new diamond-like hard coatings
Bearings	Increased life, especially in elevated-temperature and lubrication-starvation areas, for conveyors, paper machine rolls, lime kiln drive, refiners	Silicon nitride
Pump components	Decreased wear and corrosion for pulp pumps, especially in washing and bleaching; clay slurry pump in paper coating; black liquor and green mud pumps	Silicon carbide, silicon nitride, toughened alumina or zirconia; coatings such as plasma-sprayed chromium oxide or vapor-deposited diamond; ceramic-reinforced metals or ceramic matrix composites
Valves and seals	Decreased wear and corrosion	Same candidates as for pumps
Rolls	Improved reliability, improved release characteristics, and longer life with the highest priority for press roll, suction rolls, and impulse dryer rolls	Engineered coatings, new designs with segmented ceramic or ceramic matrix composite construction
Smelt spouts	Long-life uncooled spout	Will probably need to be an engineered composition determined by screening tests and optimized through iterations
Recovery boiler smelt zone lining	Refractory to protect metal tubes and resist corrosion by smelt and furnace atmosphere	Same
Heat exchanger tubes	Tubes in recovery boiler (especially superheater and reheater tubes) need improved corrosion resistance	Engineered ceramic coating. Ceramic matrix composites might work but are very expensive and at early stage of development. Gasifier alternative to recovery boiler should decrease problems, but in-bed heat exchanger may benefit from ceramic coating
Radiant burner	Improved dryer efficiency and reduced NO_x emissions	Ceramic matrix composite reverberatory screen over surface of radiant surface burner
Hot-gas cleanup	Improved efficiency and durability of flue gas cleanup systems	Monolithic or composite ceramic hot-gas filters, ceramic substrates for catalytic emission control systems
Waste water and chemicals recycling	Systems to remove metal ion buildup, particles, and excess chemicals to maintain optimum conditions in a closed-loop mill	Advanced ceramic membranes
Sensors	Improved control at all stages of the mill, especially in-line monitoring of the paper machine	Improved piezoelectric ceramic transducer systems for ultrasonic (acoustic) monitoring of paper characteristics, improved nondestructive inspection of heat exhcanger tubes to estimate residual life or to detect incipient failure
Electronics	Improved reliability of electronics modules that will monitor/control the mills of the future	Ceramic mounting packages similar to those used in automobiles

4.7 REFERENCES

Publications

American Forest & Paper Association November 1994. *Agenda 2020: A Technology Vision and Research Agenda for America's Forest, Wood and Paper Industry.*

Angelini, P., comp. August 1995. *Materials Needs and Opportunities in the Pulp and Paper Industry,* prepared for the U.S. Department of Energy, Office of Industrial Technologies, Advanced Industrial Materials Program, by Lockheed Martin Energy Systems, Oak Ridge Natl. Lab.

Brown, C. A., et al. 1997. "Update of North America's First Commercial Black Liquor Gasification Plant," pp. 33–49 in *TAPPI 1997 Engineering and Papermakers Conference Proceedings,*TAPPI Press, Atlanta.

Corboy, W. G., Jr., ed. 1993. *Yankee Dryer and Drying,* TAPPI Press, Atlanta.

DeWolf, R. H. September 1996. *Pulp and Paper Mill Operations,* a training tutorial, Thielsch Engineering, Inc., Rock Hill, S.C.

MacDonald, R., and Franklin, J., eds. 1969. *Pulp and Paper Manufacture: The Pulping of Wood,* 2nd ed., Vol.1, McGraw-Hill Book Co., New York.

Mimms, A., et al., eds. 1989. *Kraft Pulping—A Compilation of Notes,* TAPPI Press, Atlanta.

Stigsson, L. L. 1994. "Pressurized Black Liquor Gasification," pp. 331–346 in *TAPPI Pulping Conference Proceedings,* TAPPI Press, Atlanta.

Information Supplied by Industry Representatives

Jere Crouse and John Breiten, Beloit Corporation
Richard DeWolf, Thielsch Engineering, Inc.
Peter Gorog, Weyerhaeuser Company
David Orloff, Institute of Paper Science and Technology, Inc.
Lee Rockvam, ThermoChem
David Ruprecht, Air Products
Michael Smentana, Potlach Corporation