Selection of Materials to be Utilized in Fabrication Tooling for Electron-Beam Curing of Composites

Robert E. Norris
Oak Ridge Centers for Manufacturing Technology
Oak Ridge National Laboratory*
Post Office Box 2009
Oak Ridge , Tennessee 37831-8048

Mark D. Schulz
Lockheed Martin Tactical Aircraft Systems
Post Office Box 748
Fort Worth, Texas 76101

ABSTRACT

A Cooperative Research and Development Agreement (CRADA) sponsored by the Department of Energy and 10 industrial partners has been established to develop high performance electron beam (E-beam) curable polymer matrix composites. Since E-beam curing is a nonthermal curing method, the use of lower cost, low temperature tools made of foam, wood, or other materials becomes possible. As part of the CRADA, E-beam irradiation/stability studies on low-cost EB tooling have been performed. Approximately 50 potential tooling materials representing a broad cross-section of both commonly used and specialty materials were tested. Coupons from each material were exposed to the equivalent of 5 E-beam curing cycles of 75 kGy each. At the conclusion of each 5-cycle exposure set, the materials were evaluated for dimensional and hardness changes. The testing continued for each material until obvious breakdown from radiation exposure or handling. The goal is ultimately to extend testing to approximately 150 simulated cure cycles (11,250 kGy) which represents a fairly large aircraft/aerospace structure production run.

KEY WORDS: Tooling; Electron Beam Curing; Radiation Stability

---

* The Oak Ridge National Laboratory is managed by Lockheed Martin Energy Research Corporation for the U.S. Department Of Energy under contract DE-AC05-96OR22464.

1. INTRODUCTION

Electron-beam (E-beam) curing is a non-thermal method that uses high-energy electrons and/or X-rays as ionizing radiation to initiate polymerization and crosslinking reactions at controlled dose rates in polymeric materials such as those used as matrices in composites. Radiation curing has been employed in industry for a number years - typically for curing thin films or coatings. Some polymers - particularly acrylates - naturally cross link via EB energy, while others such as most high-performance epoxies, require modification to initiate curing. It has been shown that epoxies modified by the addition of photoinitiators can achieve thermomechanical properties comparable to (and in some cases better than) those typical of thermal curing (1). With this technological breakthrough created a Cooperative Research and Development Agreement (CRADA) sponsored by the Department of Energy and 10 industrial sponsors, high performance composites (as defined by thermomechanical properties) can now be fabricated via the E-beam process.

E-beam curing has several advantages over conventional thermal curing methods including: improved part quality/performance; reduced environmental, safety, and health concerns; improved material handling; ability to combine various materials and functions in a single operation; ability to utilize lower cost tooling; capability to produce unique parts that cannot be fabricated any other way; and reduced cure times. All of these factors combine to significantly reduce overall manufacturing costs.

Fabrication tooling is one area that frequently drives the costs of composite products, especially in prototypes or production lots of a couple of hundred or less (2). Traditional tooling materials utilized in fabricating composites for high performance applications have been graphite, steel, aluminum, and, more recently, Invar. These materials are relatively expensive to form and machine and the resulting tools can be fairly heavy. These materials are utilized primarily for their durability at the elevated temperatures normally required to cure these parts.

2. TOOLING MATERIALS SELECTION FACTORS

Materials selection for tool design is very much interrelated with the design of the part to be fabricated and is inseparable from design of the tool itself. There are many factors involved in both materials selection and tool design including (but not limited to):

- Fabrication Process Itself
- Dimensional Stability/Achievable Tolerances
- Mold Fabrication Process (Number Of Steps)
- Maintenance, Transportability, Handling
- Repair
- Alterability
- Part Release
- Venting/Removal Of Trapped Air And Volatiles
- Need For Resin Flow
- Desired/Required Thermal Expansion
- Wear/Durability/Toughness
- Weight
- Thermal Mass
- Thermal Conductivity
- Undercuts, Hardware, Inserts
- Required Part Curing Pressure

Temperature Level And Distribution	Cooling
Ease Of Mold Duplication	Surface Finish

As indicated earlier, the E-beam curing process is not thermally driven. This offers a major advantage in allowing a "choice" of curing temperatures from well below 0°C to as high as thermally cured materials. This advantage certainly expands the number of materials that may be chosen for utilization in tooling, as operating temperature requirements limit and frequently exclude a number of good, relatively inexpensive structural materials. E-beam curing does, however, introduce some factors that are not normally a consideration in the conventional process. Although E-beam curing does not require achievement of specific temperatures for completion, the radiation is a form of energy that is attenuated or absorbed to varying degrees as it passes through materials. Therefore, there is a temperature rise in both tool and part due to this absorption. (Temperature rise due to exothermic cure reaction is a function of the material being cured, and must be considered separately.) Another factor is that for closed mold processes such as RTM or injection molding, the ability of the radiation to penetrate through the tooling material to effectively cure the part must be considered. Finally, because radiation can alter the atomic structure of materials, the stability of a potential material candidate due to radiation exposure must be considered.

3. RADIATION INDUCED HEATING AND RADIATION PENETRATION

Maximum temperature rise due to radiation exposure can be estimated from a simple analytical expression based on conservation of energy. It is:

$$\Delta T = \frac{D}{Cp} \qquad (1)$$

where ΔT = temperature rise in C°
D = exposure dosage in kGy, and
Cp = material specific heat in J/(g x C°).

This relationship assumes that all absorbed radiation is evenly and instantaneously converted into heat and corresponding temperature rise. In reality, the dosage is absorbed over a finite time period in which some heat is transferred away by the usual mechanisms, primarily conduction and convection. Therefore, the estimate should be considered conservative in actually predicting a worst-case scenario.

Penetration capability is not quite as simple. In selecting materials for tooling, this is an issue only when a portion of the tooling is between the source (accelerator) and the part to be cured. Computer codes have been developed by Sandia National Laboratory and others utilizing monte carlo simulations to predict the energy absorption distribution within a target material subjected to radiation of various types. These codes can handle various materials, cross sections, and other

geometries. The Integrated Tiger Series (ITS) codes (3) were used to generate generalized curves (4) showing the distribution of energy from beams having energies of 2, 5, and 10 MeV through the thickness of a material having a density of 1.6 g/cm^3 are shown in Figure 1. Note that the absorbed dose initially increases as the electrons in the beam slow down and are better absorbed. The dose then decreases as the rate of absorption becomes equal to that at the surface and then exponentially tapers off. If the "useful deposition range" is defined as the thickness at which the dose absorption equals that at the target surface, this relationship can be estimated from the previously referenced generalized curves by the equation:

$$\mathbf{W_a = \frac{E}{2.2}} \qquad (2)$$

where W_a = material areal weight in g / cm^2, and
E = beam energy in MeV.

This relationship allows one to estimate the total useful deposition range or "uniform" penetration dosage from the combination of the areal weights of the material being cured and the tooling. For example, the useful deposition range for a 10 MeV accelerator is an effective material areal weight of ~4.5 g/cm^2. If the material being cured is graphite fiber composite having a density of 1.6 g/cm^3 and is 2 cm thick, the material has a W_a of 3.2 g/cm^2. This leaves an effective W_a for the tooling of 1.3 g/cm^2. If the tooling were also graphite fiber composite of 1.6 g/cm^3, the allowable tooling thickness to have uniform penetration dosage would then be 1.3/1.6 or ~ 0.8 cm. Note that by double sided curing (turning the part over and curing from the backside), the effective thickness would be essentially doubled. As will be shown later, most work indicates that epoxies and several other polymers are stable to many times the dosage expected in normal curing. The important parameter is to achieve the minimum dosage required for curing. This would provide capability for small increases in effective thickness above the useful deposition range to be compensated with additional exposure in curing. Also, converting the electron beam to X-rays can increase the effective thickness about an order of magnitude with a resultant increase in cure time of about the same magnitude.

Examples of how various materials commonly used in the composites industry compare in terms of temperature rise and penetration capability with respect to radiation exposure are shown in Table 1. Worth noting in Table 1 is that steel is the least attractive candidate material from both the penetration capability and temperature rise criteria. Aluminum is much better than steel, but in most cases is not as desirable as the polymers and polymer composites.

4. RADIATION STABILITY OF CANDIDATE MATERIALS

The third factor in tooling material selection is radiation stability. An informal survey was conducted to identify potential materials, materials systems, or concepts that take advantage of unique capabilities of E-Beam curing and evaluate these options. As much information as possible was obtained from material vendors on various products that were thought to have some potential for use as a tooling material. A database of this information is being compiled and includes

information such as CTE's, hardness, cost, moisture absorption, etc. The goal is to organize the data such that the database can be used as a users' guide to evaluate material options when designing tools for E-beam processing. While radiation stability of metals is not infinite, metals are assumed to have a useful lifetime of $>10^7$ kGy (5). This is many orders of magnitude greater than the comparable lifetime of polymers and other organics. Based on the assumption that radiation stability is not an issue for metals and that cost, temperature rise, penetration capability, and other factors make alternate materials more attractive in deriving the full benefits of E-beam processing, metals were not considered in the evaluation of radiation stability of potential tooling materials.

A series of tests were conducted to screen the material candidates for radiation stability. The ultimate goal of testing was exposure of 11,250 kGy, representing 150 cure cycles. (Early tests had indicated that ~75 kGy would completely cure most composites.) This level was chosen as representing transition from prototyping or low-level production into what would be considered high production for aircraft usage. As mentioned previously, at this range, the cost of tooling becomes much easier to amortize and is not as significant in the overall cost of production.

Sample materials were obtained from as many vendors as practical and cut into 2.5-cm x 5-cm x 15-cm coupons. Six hardness measurements were taken with a Shore-D or Shore-A Durometer on the top (5 x 15) surface. Six dimensional measurements were taken to the closest 0.01-mm with a digital caliper in the center of the surfaces defining the length (15-cm) and width (5-cm). The coupons were placed in trays with the 5 x 15 surface facing up as shown in Figure 2. The trays were then processed through an accelerator beam at a rate calculated to yield dosages equivalent to approximately 30-40 kGy per pass, which is representative of typical industry processing of polymeric materials. (As shown previously in Table 1, an instantaneous 35 kGy dose would limit heating of most polymeric materials to ~35C°.) Because it was desired that these tests be used to screen the radiation effects alone and not unnecessarily complicate the results with the effects of heating, the materials were allowed to cool back to ~40°C before re-exposing. After verifying the coupons had sufficiently cooled between each pass, the exposure was repeated until the coupons had received 375 kGy since the last measurements. (375 kGy simulates the exposure that the tooling material might receive in curing 5 parts.) Both dimensional and hardness measurements were taken at each 375 kGy increment and the sequence repeated until the ultimate goal was reached or the material obviously degraded beyond productive use. This condition was typically identified by extreme changes in dimensions or hardness or even disintegration of the sample itself.

Table 2 shows the materials that were selected for screening in this project. Most of the materials are polymeric-based or depend on polymers as matrices or binders. Although initial experience with wood (especially pine) had not been positive, a few other woods were included to quantify capabilities. Also included were plasters and bonded ceramics. Most of the materials are marketed for tooling purposes by vendors; however, a few products are not classified specifically as tooling materials. Examples are the foams, which have general sandwich construction applications, and the Aquapreg, which could be classified as a novelty material in search of an application.

5. DISCUSSION OF RESULTS

Table 3 shows the status of the testing as of June 1996. For comparison purposes, failure criteria was selected as a hardness change of >10% or a dimensional change of >0.25-mm. Even after these limits were surpassed, the materials were continued in the testing if they visually maintained structural integrity. Although none of the materials have yet completed the entire goal of 11,250 kGy, about 2/3 of the materials have not demonstrated significant change in dimensions or hardness at well over 5,000 kGy.

As classes of materials, some of the PVC foams dropped out in the early stages of testing. However, the stability depended on the exact configuration and formulation as the H250 significantly outlasted the H030, H080, and HT050. Similar, but wider, discrepancies were found with the polyurethane data. In literature references (6,7), polyurethane is characterized as among the most stable polymers. In terms of hardness, it was found to be stable in this testing also. This is not necessarily the case for dimensional stability. After a few thousand kGy, a large portion of the polyurethanes became dimensionally unstable and demonstrated pronounced warpage. However, some of the polyurethanes have remained stable above 5,000 kGy in terms of both dimensional and hardness data. Apparent data descrepancies such as those with the polyurethanes should be studied in more detail, but are presumed to be caused by variations in the exact chemistry of the material and by the diversity of filler materials employed. Typically, this information is considered proprietary to the material manufacturer and may be difficult to obtain.

It should be noted that the objective of this study was not to downselect a single, best material for E-beam tooling, but to identify significant factors different from thermal curing, establish a screening process for radiation stability, and generate data for material candidates. Based on this data, most of the materials offer potential for utilization in tooling for at least some applications. At this point, the epoxies, the cyanate ester, and the ceramics appear to be the most stable. However, it should be noted that one of the disadvantages of the ceramics is their brittleness. Several coupons from different batches were damaged and lost to testing due primarily to bumps in shipping and handling between exposure sequences.

6. CONCLUSIONS

As pointed out earlier in this text, tooling design and associated material selection are dependent on a number of factors. Most of the materials selection methodology is similar to that which is employed in conventional thermal curing with the exception of the environmental conditions encountered. Although radiation stability and durability may or may not be suitable for large production runs, significant savings can be achieved in reducing the costs of prototype tooling. E-beam curing appears to open new opportunities to materials that previously could not be utilized because of temperature restrictions.

Although testing has not been completed, several conclusions can be drawn from this work:

1. A number of materials can be used in E-beam curing of composites. Most polymers

appear capable of stability in radiation through at least ten's of prototypes if they can meet other design requirements. They offer advantages in terms of weight, penetration capability, and frequently radiation heating. This study did not address factors other than those that are by definition different from factors encountered in conventional thermal curing or combined effects.

2. Existing literature on radiation stability is a good place to start in terms of screening materials for tooling applications. However, because most testing documented in the literature is for other unrelated purposes and the formulations and configurations are likely different, representative material samples should be tested before committing to large expenses. This study provides some comparative data that allows the user a head-start in the selection process. The testing is continuing and more data will be released as it becomes available.

3. For radiation stability as applied to tooling, hardness is a good tool for screening purposes, but should not be used alone. Materials can be dimensionally unstable without appreciable changes in hardness. Likewise, materials can demonstrate appreciable changes in hardness (which may indicate loss of mechanical strength) without dimensional changes.

7. ACKNOWLEDGEMENTS

The authors would like to gratefully acknowledge the efforts of a number of people at Fort Worth and Oak Ridge who helped take measurements and compile the large amount of data. Special thanks go to our CRADA partners Atomic Energy of Canada Limited (AECL) and Nicolet Electron Services (NES) who provided the large amounts of beam time under the CRADA to make this study possible.

8. REFERENCES

1. C.J. Janke, et. al., "Electron Beam Curing of Epoxy Resins by Cationic Polymerization", 41st International SAMPE Symposium/Exhibition, March 25-28, 1996.
2. "Composite Makers Teach Old Processes New Tricks", Aerospace America, June 1994, pp. 34-42.
3. ITS 3.0, RSIC Computer Code Collection, Radiation Shielding Information, Oak Ridge National Laboratory, CCC-467 (1994).
4. R.J. Colchin,"Electron and X-Ray Transport in Materials", Internal ORNL correspondence, February 7, 1996.
5. L.W. Ricketts, "Fundamentals of Nuclear Hardening of Electronic Equipment", Radiation Effects on Electronic Materials and Passive Components, Wiley-Interscience, 1972, p. 128.
6. M.H. Van de Voorde and C. Restat, "Selection Guide to Organic Materials for Nuclear Engineering", CERN 72-7, May 17, 1972.
7. L.K. English, "How High-Energy Radiation Affects Polymers", Materials Engineering, May 1986, pp. 41-45.

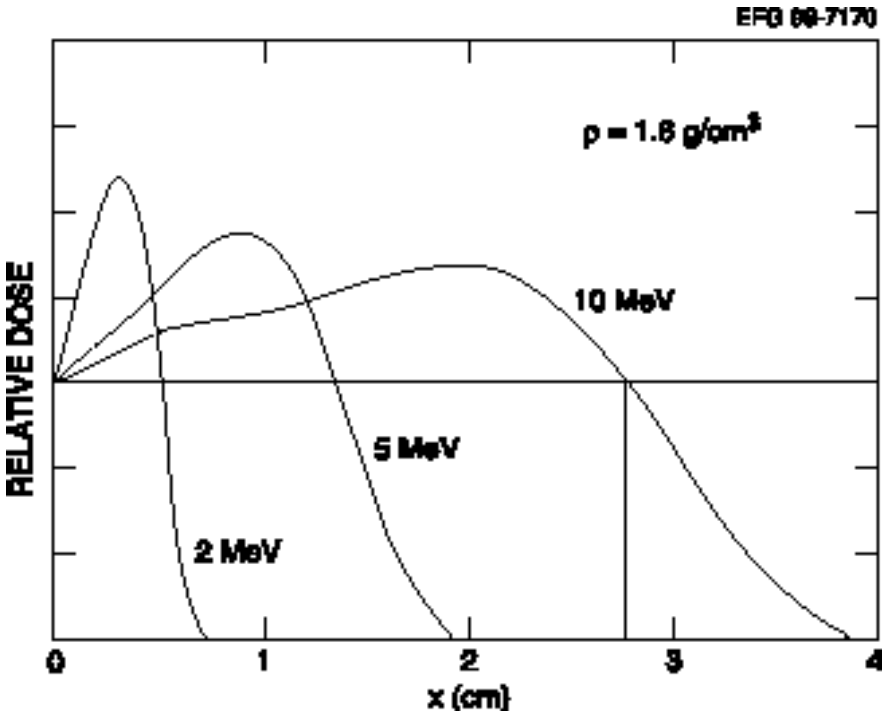

Figure 1. Relative dose deposited in a target by 2, 5, and 10 MeV electron beams.

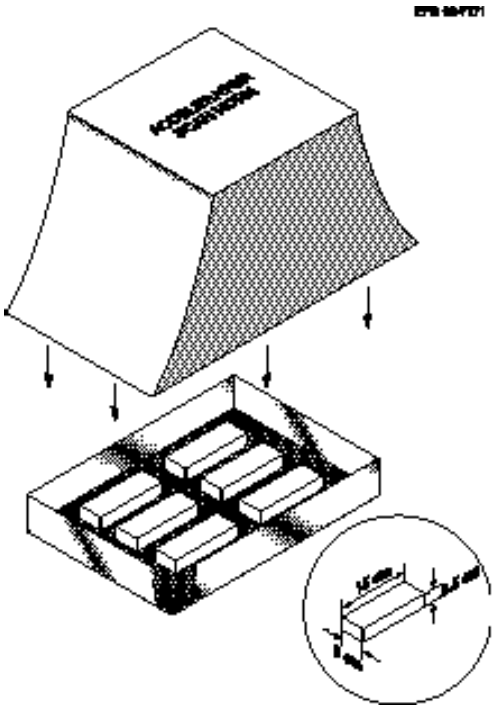

Figure 2. Radiation stability testing of coupons under the accelerator beam.

Material	Density	Penetration Capability (E=10 MeV)*	Specific Heat	Heat Rise (D=35 kGy)**
	g / cm^3	cm	J / (g x C°)	C°
Aluminum	2.74	1.63	0.97	36
Steel	7.68	0.58	0.46	76
Epoxy	1.24	3.59	1.84	19
PVC Foam	0.24	18.56	0.97	36
Polyurethane Foam	0.77	5.79	1.67	21
Phenolic	1.55	2.87	1.30	27
Carbon fiber/epoxy	1.59	2.80	1.13	31
Glass fiber/epoxy	2.17	2.05	0.63	56

* Assumes equation E = 2.2 x Wa, where Wa is in g/cm^2
** Assumes adiabatic process ΔT = Dose / Specific Heat

Table 1. Comparison of estimated temperature rise and penetration thickness for various types of material.

Material ID	Manufacturer or Supplier	Material Description
Aquapreg	Crest Products Corp.	Fiberglass reinforced isocyanate (cures with water)
BryteCor™ EX-1541	Bryte Technologies, Inc.	Cyanate ester syntactic foam
CareMold 800	Composites Horizons, Inc.	Proprietary castable and wash out composite
Castable 220	J.L. Peters Co.	Single component, castable fused silica
Cercon T-11	Cercon, Inc.	Chemically bonded ceramic composite
CibaTool (XB-5143)	CIBA-GEIGY Corporation	Acrylated stereolithography resin
DP-1051	Tool Chemical Co., Inc.	Aluminum filled polyurethane
FASTool	Integrated Composites	Castable epoxy/hollow glass beads for structure back
FP-1050	Tool Chemical Co., Inc.	Urethane
FR-3706	General Plastics Manufacturing Co.	Rigid polyurethane closed cell foam
FR-3710	General Plastics Manufacturing Co.	Rigid polyurethane closed cell foam
FR-3715	General Plastics Manufacturing Co.	Rigid polyurethane closed cell foam
FR-3718	General Plastics Manufacturing Co.	Rigid polyurethane closed cell foam
FR-3720	General Plastics Manufacturing Co.	Rigid polyurethane closed cell foam
FR3730	General Plastics Manufacturing Co.	Rigid polyurethane closed cell foam
Freeman Wax	Freeman Mfg. & Supply	Machinable wax
H030	Divinycell International, Inc.	PVC, closed cell foam
H080	Divinycell International, Inc.	PVC, closed cell foam
H250	Divinycell International, Inc.	PVC, closed cell foam
Hexcelite5003	Hexcel Corporation	Epoxy syntactic foam tooling board
Himeko BL-3	Fujipoly Inc.	Epoxy
HT050	Divinycell International, Inc.	PVC, closed cell foam
Jelutong	McCausey Lumber Co.	Indonesian white wood, medium hardness
Mahogany	McCausey Lumber Co.	Relatively hard wood, readily available, easy to work
MB2000	BCC Products, Inc.	Polyurethane
Modelmaster A160	Airtech International, Inc.	Epoxy tooling board
Modulan	McCausey Lumber Co.	Polyurethane foam tooling board
MP-1053	Tool Chemical Co., Inc.	Urethane
MP-42-400	Tool Chemical Co., Inc.	Bis A Epoxy
PFP (1124 surface coat)	(Internally Produced)	Plastic-faced-plaster
PFP (Epolite 1350)	(Internally Produced)	Plastic-faced-plaster
Pine Perfect Plank		Soft wood sold without knots
Polyboard 140	Fiber-Resin Corp.	Filled polyurethane
PP-1052	Tool Chemical Co., Inc.	Filled urethane
REN 350	CIBA-GEIGY Corporation	Polyurethane foam tooling board
REN 350 w/epoxy coat	CIBA-GEIGY Corporation	Polyurethane foam tooling board
REN 450 w/epoxy coat	CIBA-GEIGY Corporation	Polyurethane foam tooling board
REN 450 w/epoxy surface	CIBA-GEIGY Corporation	Polyurethane foam tooling board
REN 460	CIBA-GEIGY Corporation	Polyurethane foam tooling board
REN 550	CIBA-GEIGY Corporation	Polyurethane foam tooling board
REN 550 w/epoxy surface	CIBA-GEIGY Corporation	Polyurethane foam tooling board
Richlite	The Henry Company	Phenolic laminate sheets
T-11	Cercon, Inc.	Chemically bonded ceramic composite
TB 620	Advanced Composites Group	Epoxy based syntactic foam
TB 650	Advanced Composites Group	Epoxy based syntactic foam
UCB	UCB Chemicals	Acrylated stereolithography resin

Table 2. Materials selected for radiation stability screening.

Table 2. Materials selected for radiation stability screening.

Material	Exposure to Date	Stability at Dose		Test Status ***	Comments/Observations
	kGy	Hardness *	Dimension **		
Aquapreg	4,125	LC	LC	IP	
Bryte Synpak	5,250	LC	LC	IP	
Castable 220	3,000	LC	LC	IP	Testing to resume
CerCon CBC (T-11)	2,250	LC	LC	IP	1 broke in handling after 1500 kGy
DP-1051	6,000	LC	LC	IP	
FASTool	4,125	NA	LC	IP	
FP-1050	5,625	LC	750	TT	All samples bent or warped
FR-3710	6,000	1,125	3,375	IP	Hardness increasing, small dimensional changes
FR-3715	5,250	LC	LC	IP	
FR-3720	5,250	LC	LC	IP	
FR3730	5,625	LC	LC	IP	
Freeman Wax	6,000	LC	375	IP	Small surface defects on 1 sample @ 4875
H030	4,125	375	750	TT	Samples disintegrating
H080	3,375	0	750	TT	Samples disintegrating
H250	5,250	4,500	4,125	TT	
Hexcelite5003	7,125	LC	LC	IP	
Himeko BL-3	5,625	LC	LC	IP	
HT050	375	0	0	TT	Samples disintegrating
Jelutong	5,250	750	3,375	TT	Samples destroyed at final dosage
Mahogany	4,875	3,750	4,125	TT	Length more stable than width, 1 cracked @3375
MB2000	4,875	LC	4,500	TT	Surface bubble on #4 @ 4125
Modelmaster A160	5,250	LC	LC	IP	
Modulan	5,625	LC	3,000	TT	Bowing @ 4875
MP-1053	5,250	LC	LC	IP	
MP-42-400	5,625	LC	4,500	IP	
PFP (1124 surface coat)	5,250	4,825	4,125	TT	
PFP (Epolite 1350)	5,625	LC	LC	IP	Sample 4 broke @ 2625
Polyboard 140	4,875	LC	1,125	TT	
PP-1052	5,625	LC	LC	IP	
REN 350	5,250	LC	LC	IP	
REN 450 w/epoxy surface	4,875	LC	2,250	TT	
REN 460	4,875	LC	1,500	TT	
REN 550	5,625	LC	LC	IP	
Richlite	4,500	3,750	3,750	TT	Some delamination, 3 samples removed @ 4125
T-11	6,000	LC	LC	IP	Sample 1 broke @ 2625
TB 620	5,250	LC	LC	IP	
TB 650	5,250	LC	LC	IP	
UCB	5,250	LC	LC	IP	Appearance of fine cracks @ 3750

* Dose at which hardness reduction exceeds 10%, LC = Little Change
** Dose at which dimensional changes exceed 0.010-in, LC = Little Change
*** IP = In Progress
TT = Tests Terminated

Table 3. Radiation stability test status as of June 1996.

Table 3. Radiation stability test status as of June 1996.